U.S.NRC
United States Nuclear Regulatory Commission
Protecting People and the Environment

NUREG/CR-7259
ANL/EVS-19/3

MILDOS Version 4.1 Computational Verification Report

Office of Nuclear Regulatory Research

AVAILABILITY OF REFERENCE MATERIALS IN NRC PUBLICATIONS

NRC Reference Material

As of November 1999, you may electronically access NUREG-series publications and other NRC records at the NRC's Library at www.nrc.gov/reading-rm.html. Publicly released records include, to name a few, NUREG-series publications; *Federal Register* notices; applicant, licensee, and vendor documents and correspondence; NRC correspondence and internal memoranda; bulletins and information notices; inspection and investigative reports; licensee event reports; and Commission papers and their attachments.

NRC publications in the NUREG series, NRC regulations, and Title 10, "Energy," in the *Code of Federal Regulations* may also be purchased from one of these two sources:

1. **The Superintendent of Documents**
   U.S. Government Publishing Office
   Washington, DC 20402-0001
   Internet: www.bookstore.gpo.gov
   Telephone: (202) 512-1800
   Fax: (202) 512-2104

2. **The National Technical Information Service**
   5301 Shawnee Road
   Alexandria, VA 22312-0002
   Internet: www.ntis.gov
   1-800-553-6847 or, locally, (703) 605-6000

A single copy of each NRC draft report for comment is available free, to the extent of supply, upon written request as follows:

Address: **U.S. Nuclear Regulatory Commission**
Office of Administration
Multimedia, Graphics, and Storage & Distribution Branch
Washington, DC 20555-0001
E-mail: distribution.resource@nrc.gov
Facsimile: (301) 415-2289

Some publications in the NUREG series that are posted at the NRC's Web site address www.nrc.gov/reading-rm/doc-collections/nuregs are updated periodically and may differ from the last printed version. Although references to material found on a Web site bear the date the material was accessed, the material available on the date cited may subsequently be removed from the site.

Non-NRC Reference Material

Documents available from public and special technical libraries include all open literature items, such as books, journal articles, transactions, *Federal Register* notices, Federal and State legislation, and congressional reports. Such documents as theses, dissertations, foreign reports and translations, and non-NRC conference proceedings may be purchased from their sponsoring organization.

Copies of industry codes and standards used in a substantive manner in the NRC regulatory process are maintained at—

The NRC Technical Library
Two White Flint North
11545 Rockville Pike
Rockville, MD 20852-2738

These standards are available in the library for reference use by the public. Codes and standards are usually copyrighted and may be purchased from the originating organization or, if they are American National Standards, from—

American National Standards Institute
11 West 42nd Street
New York, NY 10036-8002
Internet: www.ansi.org
(212) 642-4900

Legally binding regulatory requirements are stated only in laws; NRC regulations; licenses, including technical specifications; or orders, not in NUREG-series publications. The views expressed in contractor prepared publications in this series are not necessarily those of the NRC.

The NUREG series comprises (1) technical and administrative reports and books prepared by the staff (NUREG–XXXX) or agency contractors (NUREG/CR–XXXX), (2) proceedings of conferences (NUREG/CP–XXXX), (3) reports resulting from international agreements (NUREG/IA–XXXX),(4) brochures (NUREG/BR–XXXX), and (5) compilations of legal decisions and orders of the Commission and the Atomic and Safety Licensing Boards and of Directors' decisions under Section 2.206 of the NRC's regulations (NUREG–0750).

DISCLAIMER: This report was prepared as an account of work sponsored by an agency of the U.S. Government. Neither the U.S. Government nor any agency thereof, nor any employee, makes any warranty, expressed or implied, or assumes any legal liability or responsibility for any third party's use, or the results of such use, of any information, apparatus, product, or process disclosed in this publication, or represents that its use by such third party would not infringe privately owned rights.

U.S.NRC
United States Nuclear Regulatory Commission
Protecting People and the Environment

NUREG/CR-7259
ANL/EVS-19/3

MILDOS Version 4.1 Computational Verification Report

Manuscript Completed: April 2019
Date Published: November 2019

Prepared by
B.M. Biwer, D.J. LePoire, S. Kamboj, and Y.-S. Chang

Environmental Science Division
Argonne National Laboratory
9700 South Cass Avenue
Argonne, IL 60439
Argonne is a U.S. Department of Energy laboratory managed by UChicago Argonne, LLC

Casper Sun, NRC Project Manager

Office of Nuclear Regulatory Research

ABSTRACT

Verification calculations were performed to provide assurance that the MILDOS computer code is performing its calculations as intended, that is, the models are properly implemented in the code. MILDOS is used to estimate the radiological impacts from airborne emissions from uranium milling facilities. It provides the capability to consider both conventional uranium ore operations and operations associated with in situ recovery facilities. The code is used by license applicants and U.S. Nuclear Regulatory Commission staff to perform routine radiological impact estimates for the licensing of various uranium recovery operations. Independent verification of the calculations was performed external to the computer code in spreadsheets using Microsoft Excel®. All major portions of the code were investigated. The verification was conducted on a step-by-step basis and used five sample test cases as templates. Calculations were performed to verify the reported radionuclide release rates, air dispersion results, environmental media concentrations, and human exposure doses.

TABLE OF CONTENTS

ABSTRACT ..... **iii**

LIST OF FIGURES ..... **vii**

LIST OF TABLES ..... **xi**

1 INTRODUCTION **1-1**
1.1 Scope 1-1
1.2 Sample Test Cases 1-1
1.3 Calculations Verified Directory 1-2
1.3.1 Radionuclide Release Rates 1-2
1.3.2 Air Transport 1-2
1.3.3 Environmental Media Concentrations 1-3
1.3.4 Human Exposure 1-4
1.4 Report Organization 1-4

2 RELEASE CALCULATIONS **2-1**
2.1 Point Source 2-1
2.2 Area Source 2-2
2.3 New Well Field Source 2-5
2.4 Well Field Related Sources 2-5
2.5 Drying/Packaging Source 2-6
2.6 Land Application Source 2-6

3 ATMOSPHERIC DISPERSION **3-1**
3.1 Effective Release Height 3-1
3.2 Downwind Direct Air Concentrations 3-6
3.2.1 No Plume Reflection 3-6
3.2.2 Plume Reflection 3-10

4 ENVIRONMENTAL MEDIA CONCENTRATIONS **4-1**
4.1 Radionuclide Ground Concentrations 4-1
4.2 Radionuclide Air Concentrations 4-4
4.2.1 Resuspension 4-4
4.2.2 Total Air Concentrations 4-4
4.2.2.1 Particulates 4-4
4.2.2.2 Radon 4-9
4.3 Vegetation Concentrations 4-23
4.4 Meat and Milk Concentrations 4-24

5 HUMAN EXPOSURE MODELS **5-1**
5.1 Inhalation 5-1
5.1.1 Particulates 5-1
5.1.2 Radon 5-2
5.2 External 5-4
5.3 Ingestion 5-6

APPENDIX A VARIABLE DEFINITIONS A-1

APPENDIX B CASE 1 USER FILE INPUT SUMMARY..... B-1

APPENDIX C CASE 2 USER FILE INPUT SUMMARY..... C-1

APPENDIX D CASE 3a USER FILE INPUT SUMMARY..... D-1

APPENDIX E CASE 3b USER FILE INPUT SUMMARY.....E-1

APPENDIX F CASE 3c USER FILE INPUT SUMMARY F-1

LIST OF FIGURES

Figure 2-1 Hand Calculation of the Particulate Emission Rate from the Ore Pad for the Sixth Wind Speed Category in Case 1 2-3
Figure 2-2 Hand Calculation of the Particulate Radionuclide Release Rates from the Ore Pad in Case 1 2-5
Figure 2-3 Hand Calculation of the Radon Release Rates from the New Well Field in Case 2 2-5
Figure 2-4 Hand Calculation of the Component Radon Releases from the Production Well Field in Case 2 2-7
Figure 2-5 Hand Calculation of the Total Radon Release Rates from the Production Well Field in Case 2 2-8
Figure 2-6 Hand Calculation of the Radon Releases from the Restoration Well Field in Case 2 2-9
Figure 2-7 Hand Calculation of the Annual Activity Released from the Yellowcake Stack in Case 1 2-10
Figure 2-8 Hand Calculation of the Activity Released from the Land Application Area in Case 2 at Time Step 4 2-11
Figure 3-1 Hand Calculation of the Effective Wind Speed and Release Height for 7.7 μm Particulates at the N Receptor Location in Case 3a for the Momentum-Driven Plume 3-2
Figure 3-2 Hand Calculation of the Effective Wind Speed and Release Height for 54 μm Particulates at the N Receptor Location in Case 3a for the Momentum-Driven Plume 3-3
Figure 3-3 Hand Calculation of the Effective Wind Speed and Release Height for 7.7 μm Particulates at the N Receptor Location in Case 3c for the Buoyancy-Induced Plume 3-4
Figure 3-4 Hand Calculation of the Buoyancy-Induced Plume Rise in Case 3c for 7.7 μm Particulates 3-5
Figure 3-5 Hand Calculation of Ra-226 Concentration in 7.7 μm Particulates at the N Receptor Location in Case 3a at Time Step 1 3-7
Figure 3-6 Hand Calculation of the Ra-226 Depleted Source Strength in 7.7 μm Particulates at the N Receptor Location in Case 3a at Time Step 1 3-8
Figure 3-7 Hand Calculation of Ra-226 Concentration in 54 μm Particulates at the N Receptor Location in Case 3a at Time Step 1 3-9
Figure 3-8 Hand Calculation of the Ra-226 Depleted Source Strength in 54 μm Particulates at the N Receptor Location in Case 3a at Time Step 1 3-10
Figure 3-9 Hand Calculation of Ra-226 Concentration in 7.7 μm Particulates at the N Receptor Location in Case 3c at Time Step 1 3-11
Figure 3-10 Hand Calculation of Ra-226 Concentration in 7.7 μm Particulates at the Far SSW Receptor Location in Case 3a at Time Step 1 3-12
Figure 3-11 Hand Calculation of the Effective Wind Speed and Release Height for 7.7 μm Particulates at the Far SSW Receptor Location in Case 3a 3-13
Figure 3-12 Hand Calculation of the Ra-226 Depleted Source Strength for 7.7 μm Particulates at the Far SSW Receptor Location in Case 3a at Time Step 1 3-14
Figure 3-13 Hand Calculation of the Effective Wind Speed and Release Height for 7.7 μm Particulates for the 5–10 km WSW Location on the Population Grid in Case 3a 3-15

Figure 3-14 Hand Calculation of the Ra-226 Depleted Source Strength for 7.7 μm Particulates at the 5–10 km WSW Location on the Population Grid in Case 3a at Time Step 1 3-16
Figure 3-15 Hand Calculation of Ra-226 Concentration in 7.7 μm Particulates at the 5–10 km WSW Location on the Population Grid in Case 3a at Time Step 1 3-17
Figure 4-1 Hand Calculation of the Direct Air Concentration of U-238 in 7.7 μm Particulates from the Ore Pad at the Nearest Resident NNW Receptor Location in Case 1 4-1
Figure 4-2 Hand Calculation of the Ground Concentration of U-238 in 7.7 μm Particulates from the Ore Pad at the Nearest Resident NNW Receptor Location in Case 1 4-2
Figure 4-3 Hand Calculation of the Ground Concentration of U-238 in 7.7 μm Particulates from the Ore Pad at the Nearest Resident NNW Receptor Location after Time Step 4 in Case 1 4-3
Figure 4-4 Hand Calculation of the Direct Air Concentration of U-238 in 7.7 μm Particulates from the Ore Pad at 10–20 km SSW on the Population Grid in Case 1 4-4
Figure 4-5 Hand Calculation of the Ground Concentration of U-238 in 7.7 μm Particulates from the Ore Pad at 10–20 km SSW on the Population Grid after Time Step 4 in Case 1 4-5
Figure 4-6 Hand Calculation of the Ground Concentration of Po-218 from Rn-222 Decay at 5–10 km WSW Location on the Population Grid after Time Step 1 in Case 3a 4-6
Figure 4-7 Hand Calculation of the Resuspended Air Concentration of U-238 in 7.7 μm Particulates from the Ore Pad at the Nearest Resident NNW Receptor Location after Time Step 4 in Case 1 4-7
Figure 4-8 Hand Calculation of the Resuspended Air Concentration of U-238 in 7.7 μm Particulates from the Ore Pad at 10–20 km SSW on the Population Grid after Time Step 4 in Case 1 4-8
Figure 4-9 Hand Calculation of the Total Air Concentration of U-238 in 7.7 μm Particulates from the Ore Pad at the Nearest Resident NNW Receptor Location and the 10–20 km SSW Location on the Population Grid after Time Step 4 in Case 1 4-9
Figure 4-10 Hand Calculation of the Total Air Concentration of U-238 from the Ore Pad at the Nearest Resident NNW Receptor Location and the 10–20 km SSW Location on the Population Grid after Time Step 4 in Case 1 4-9
Figure 4-11 Hand Calculation of the Effective Release Height and Effective Wind Speed for a Gas at the N Receptor Location in Case 3a 4-10
Figure 4-12 Hand Calculation of the Rn-220 Air Concentration at the N Receptor Location for Time Step 1 in Case 3a 4-11
Figure 4-13 Hand Calculation of the Rn-222 Air Concentration at the N Receptor Location for Time Step 1 in Case 3a 4-11
Figure 4-14 Hand Calculation of the Air Concentration at the N Receptor Location for Time Step 1 in Case 3a for the Pb-212 Daughter Product of Rn-220 4-12
Figure 4-15 Hand Calculation of the Air Concentration at the N Receptor Location for Time Step 1 in Case 3a for the Pb-214 Daughter Product of Rn-222 4-13
Figure 4-16 Hand Calculation of the Effective Buoyancy-Induced Plume Release Height and Effective Wind Speed for a Gas (including Radon) at the N Receptor Location in Case 3c 4-14

Figure 4-17 Hand Calculation of the Buoyancy-Induced Plume Rise in Case 3c for Gases (including Radon) at the N Receptor Location 4-15
Figure 4-18 Hand Calculation of the Rn-220 Air Concentration at the N Receptor Location for Time Step 1 in Case 3c 4-16
Figure 4-19 Hand Calculation of the Rn-222 Air Concentration at the N Receptor Location for Time Step 1 in Case 3c 4-16
Figure 4-20 Hand Calculation of the Air Concentration at the N Receptor Location for Time Step 1 in Case 3c for the Pb-212 Daughter Product of Rn-220 4-17
Figure 4-21 Hand Calculation of the Air Concentration at the N Receptor Location for Time Step 1 in Case 3c for the Pb-214 Daughter Product of Rn-222 4-18
Figure 4-22 Hand Calculation of the Effective Momentum-Driven Plume Release Height and Effective Wind Speed for a Gas at the 5–10 km WSW Location on the Population Grid in Case 3a at Time Step 1 4-19
Figure 4-23 Hand Calculation of the Rn-220 Air Concentration at the 5–10 km WSW Location on the Population Grid in Case 3a at Time Step 1 4-20
Figure 4-24 Hand Calculation of the Rn-222 Air Concentration at the 5–10 km WSW Location on the Population Grid in Case 3a at Time Step 1 4-20
Figure 4-25 Hand Calculation of the Air Concentration at the 5–10 km WSW Location on the Population Grid in Case 3a at Time Step 1 for the Pb-212 Daughter Product of Rn-220 4-21
Figure 4-26 Hand Calculation of the Air Concentration at the 5–10 km WSW Location on the Population Grid in Case 3a at Time Step 1 for the Pb-214 Daughter Product of Rn-222 4-22
Figure 4-27 Hand Calculation of the Air Concentration at the 5–10 km WSW Location on the Population Grid in Case 3a at Time Step 1 for the Po-218 Daughter Product of Rn-222 4-23
Figure 4-28 Concentration of U-238 from 7.7 μm Particulates from the Ore Pad in aboveground and belowground Vegetables and Potatoes at the Nearest Resident NNW Receptor Location after Time Step 4 in Case 1 4-25
Figure 4-29 Concentration of U-238 from 7.7 μm Particulates from the Ore Pad in Animal Feed, Meat, and Milk at the Nearest Resident NNW Receptor Location after Time Step 4 in Case 1 4-26
Figure 4-30 Concentration of U-238 from 7.7 μm Particulates from the Ore Pad in aboveground and belowground Vegetables and Potatoes at the 10–20 km SSW Location on the Population Grid after Time Step 4 in Case 1 4-27
Figure 4-31 Concentration of U-238 from 7.7 μm Particulates from the Ore Pad in Animal Feed, Meat, and Milk at the 10–20 km SSW Location on the Population Grid after Time Step 4 in Case 1 4-28
Figure 5-1 Inhalation Dose Rate to Nearest Resident NNW from U-238 from All Particulates (7.7 μm and 54 μm) from the Ore Pad during Time Step 4 in Case 1 5-1
Figure 5-2 Population Inhalation Dose from U-238 from the Ore Pad at the 10–20 km SSW Location on the Population Grid after Time Step 4 in Case 1 5-3
Figure 5-3 Radon Inhalation Dose to Nearest Resident NNW from the Ore Pad during Time Step 4 in Case 1 5-4
Figure 5-4 Radon Inhalation Population Dose from All Sources at the 10–20 km SSW Location on the Population Grid after Time Step 4 in Case 1 5-5

Figure 5-5 External Dose from Groundshine and Cloudshine from U-238 in 7.7 μm Particulates from the Ore Pad during Time Step 4 in Case 1 5-6
Figure 5-6 Ingestion Dose from U-238 in 7.7 μm Particulates to Nearest Resident NNW from the Ore Pad during Time Step 4 in Case 1 5-7
Figure 5-7 Sample Calculations Used in Population Ingestion Dose Analysis for U-238 in 7.7 μm Particulates from the Ore Pad during Time Step 4 in Case 1 5-7
Figure 5-8 Activity of U-238 in Food from 7.7 μm Particulates from the Ore Pad at the 10–20 km SSW Location on the Population Grid at Time Step 4 in Case 1 5-8
Figure 5-9 Population Ingestion Dose from U-238 from the Ore Pad from Food Grown at the 10–20 km SSW Location on the Population Grid at Time Step 4 in Case 1 5-9

LIST OF TABLES

Table 2-1 Sample Test Case Emission Sources 2-1
Table 2-2 Calculated Radionuclide Release Rates for the Grizzly Dump Hopper 2-2
Table 2-3 Particulate Emission Rate Data for Case 1 2-4
Table 3-1 Comparison of MILDOS Direct Downwind Air Concentrations of Ra-226 during Time Step 1 with the Verification Spreadsheet for Case 3a 3-8
Table 5-1 Fraction of Food Type Consumed by Age Group 5-8

1 INTRODUCTION

The MILDOS computer code is used to estimate the radiological impacts from airborne emissions from uranium milling facilities. It provides the capability to consider both conventional uranium ore operations and operations associated with *in situ* recovery (ISR) facilities. The code is used by license applicants and U.S. Nuclear Regulatory Commission staff to perform routine radiological impact estimates for the licensing of various uranium recovery operations.

The technical reference and user manual for version 4 of the MILDOS computer code is provided in NUREG/CR-7258 (*Technical Manual and User's Guide for MILDOS Version 4.1*), hereinafter referred to as the manual. This companion report documents the process used to verify the proper operation of version 4.1 of the computer code. It provides assurance that the code is performing the calculations as intended, that is, the models are properly implemented in the code.

1.1 Scope

Independent verification of the calculations was performed external to the computer code in spreadsheets using Microsoft Excel 2016® (a component of Microsoft Office Professional Plus 2016). All major portions of the code were investigated. The verification was conducted on a step-by-step basis and used five test cases as templates. MILDOS user application files are in the SQLite database file format.

The types of calculations evaluated are summarized in Section 1.3. The calculations are presented as figures (of the stylized equations in the spreadsheet) throughout this document. The equation numbers shown next to the calculations correspond with the equation numbers in the MILDOS manual. Consideration of all possible option combinations is not practical, but the calculations considered cover the basic operations of the code (e.g., radionuclide release, air dispersion, and deposition) and all major options (e.g., choice of plume rise model and Rn-222 outdoor equilibrium factor).

1.2 Sample Test Cases

Five sample test cases were used to evaluate the proper operation of the code. Case 1 contains emission sources that could be found at a typical hard rock uranium milling facility. Case 2 involves emission sources typical of an ISR uranium facility. All source type options were exercised. Case 3a considers single stability class – wind speed meteorological data combinations for each direction; Case 3b considers the combined set, from Case 3a for a single direction to show proper operation of the air dispersion model. Case 3c is the same as Case 3a with the exception that the point source is modeled with buoyancy-induced plume rise rather than momentum-driven plume rise. Table 2-1 lists the emission source names and source types used. Detailed user input for each case is presented in the appendices.

The sample test cases are illustrative for verification purposes only and are not intended to be representative of any actual scenario. Likewise, the input values used in sample cases are for verification purposes only and are not intended to be representative of any specific facility, source type, or location. The default user input parameter values in MILDOS are only placeholders. It is the responsibility of the user to determine the appropriate value for each user input for a given scenario that is to be assessed.

1.3 Calculations Verified Directory

1.3.1 Radionuclide Release Rates

- Point Source (Case 1; Table 2-2)
- Area Source
  - Source Area Size (Section 2.2 discussion)
  - Particulate Emission (Erosion Model) (Case 1; Figs. 2-1 and 2-2, Table 2-3)
- New Well Field Source (Case 2; Fig. 2-3)
- Well Field Source (Case 2; Figs. 2-4, 2-5, and 2-6)
- Well Field Purge Source (Case 2; Figs. 2-4, 2-5, and 2-6)
- Well Field Ion Exchange Source (Case 2; Figs. 2-4 and 2-5)
- Drying/Packaging Source (Case 1; Fig. 2-7)
- Land Application Source (Case 2; Fig. 2-8)

1.3.2 Air Transport

- Effective Release Height/Wind Speed
  - Momentum-Driven Plume Rise
    - Particulates
      - Individual Receptor (non-mixing plume) (7.7 μm and 54 μm) (Case 3a; Figs. 3-1 and 3-2)
      - Individual Receptor (mixing plume) (7.7 μm) (Case 3a; Fig. 3-11)
      - Population (mixing plume) (7.7 μm) (Case 3a; Fig. 3-13)
    - Radon
      - Individual Receptor (non-mixing plume) (Case 3a; Fig. 4-11)
      - Population (mixing plume) (Case 3a; Fig. 4-22)
  - Buoyancy-Induced Plume Rise
    - Particulates
      - Individual Receptor (non-mixing plume) (7.7 μm) (Case 3c; Figs. 3-3 and 3-4)
    - Radon
      - Individual Receptor (non-mixing plume) (Case 3a; Figs. 4-16 and 4-17)
- Direct Downwind Air Concentration (particulates with plume depletion)
  - Non-Mixing Plume
    - Individual Receptor (momentum-driven plume rise) (7.7 μm and 54 μm) (Case 3a; Figs. 3-5 to 3-8 and 4-1)
    - Individual Receptor (buoyancy-induced plume rise) (7.7 μm) (Case 3a; Fig. 3-9)
  - Mixing Plume
    - Individual Receptor (momentum-driven plume rise) (7.7 μm) (Case 3a; Figs. 3-10 and 3-12)
    - Population (momentum-driven plume rise) (7.7 μm) (Case 3a; Figs. 3-14, 3-15, and 4-4)

1.3.3 Environmental Media Concentrations

- Ground Concentrations (particulates only)
  - Individual Receptor (7.7 μm) (Case 1; Figs. 4-2 and 4-3)
  - Population (7.7 μm) (Case 1; Fig. 4-5)
  - Population (Rn-222 daughter Po-218) (Case 3a; Fig. 4-6)
- Air Concentrations
  - Resuspension (particulates only)
    - Individual Receptor (7.7 μm) (Case 1; Fig. 4-7)
    - Population (7.7 μm) (Case 1; Fig. 4-8)
  - Total Air Concentrations (direct + resuspended)
    - Individual Receptor (7.7 μm) (Case 1; Fig. 4-9)
    - Individual Receptor (particulate total) (Case 1; Fig. 4-10)
    - Population (7.7 μm) (Case 1; Fig. 4-9)
    - Population (particulate total) (Case 1; Fig. 4-10)
  - Radon
    - Individual Receptor
      - Rn-220 (momentum-driven plume rise) (Case 3a; Fig. 4-12)
      - Rn-222 (momentum-driven plume rise) (Case 3a; Fig. 4-13)
      - Pb-212 Daughter of Rn-220 (momentum-driven plume rise) (Case 3a; Fig. 4-14)
      - Pb-214 Daughter of Rn-222 (momentum-driven plume rise) (Case 3a; Fig. 4-15)
      - Rn-220 (buoyancy-induced plume rise) (Case 3c; Fig. 4-18)
      - Rn-222 (buoyancy-induced plume rise) (Case 3c; Fig. 4-19)
      - Pb-212 Daughter of Rn-220 (buoyancy-induced plume rise) (Case 3c; Fig. 4-20)
      - Pb-214 Daughter of Rn-222 (buoyancy-induced plume rise) (Case 3c; Fig. 4-21)
    - Population
      - Rn-220 (momentum-driven plume rise) (Case 3a; Fig. 4-23)
      - Rn-222 (momentum-driven plume rise) (Case 3a; Fig. 4-24)
      - Pb-212 Daughter of Rn-220 (momentum-driven plume rise) (Case 3a; Fig. 4-25)
      - Pb-214 Daughter of Rn-222 (momentum-driven plume rise) (Case 3a; Fig. 4-26)
      - Po-218 Daughter of Rn-222 (momentum-driven plume rise) (Case 3a; Fig. 4-27)
- Vegetation Concentrations
  - Human Consumables
    - Individual Receptor (7.7 μm) (Case 1; Fig. 4-28)
    - Population (7.7 μm) (Case 1; Fig. 4-30)
  - Animal Feed
    - Individual Receptor (7.7 μm) (Case 1; Fig. 4-29)
    - Population (7.7 μm) (Case 1; Fig. 4-31)
- Meat and Milk Concentrations
  - Individual Receptor (7.7 μm) (Case 1; Fig. 4-29)
  - Population (7.7 μm) (Case 1; Fig. 4-31)

1.3.4 Human Exposure

- Inhalation
  - Particulates
    - Dose Conversion Factor Calculation (Case 1; Fig. 5-1)
    - Individual Receptor (particulate total) (Case 1; Fig. 5-1)
    - Population (particulate total) (Case 1; Fig. 5-2)
  - Radon (Rn-220 and Rn-222)
    - Individual Receptor (Case 1; Fig. 5-3)
    - Population (Case 1; Fig. 5-4)
- External (groundshine and cloudshine)
  - Individual Receptor (7.7 μm) (Case 1; Fig. 5-5)
  - Population (7.7 μm) (Case 1; Fig. 5-5)
- Ingestion
  - Individual Receptor (7.7 μm) (Case 1; Fig. 5-6)
  - Population
    - Fraction of Meat Produced in Population Segment Consumed by Adults (Case 1; Fig. 5-7)
    - Average Vegetable Concentrations in Population Segment (7.7 μm) (Case 1; Fig. 5-7)
    - Fraction of Food Type Consumed by Age Group (Case 1; Table 5-1)
    - Total Activity in Food in Population Segment (7.7 μm) (Case 1; Fig. 5-8)
    - Ingestion Dose by Age Group in Population Segment (7.7 μm) (Case 1; Fig. 5-9)

1.4 Report Organization

The presentation order of the calculation verification follows the general order of the calculation order when estimating impacts. The first two test cases used as the basis for the code verification are described in Section 2 along with verification of the estimated radionuclide release amounts for each case. Section 3 considers the air dispersion calculations using the other three test cases. The resulting media concentrations (air, ground, plant, and animal) are examined in Section 4. Human exposure calculations are considered in Section 5.

2 RELEASE CALCULATIONS

This Section examines the calculations used to estimate the amount of radionuclides released for each of the emission source types considered in MILDOS. The estimated release of activity for each source type is calculated according to the methodology provided in the MILDOS manual and compared with the results in the sample case files generated by the computer code to verify proper operation of the code.

2.1 Point Source

The point source in Case 1 is the "Grizzly Dump Hopper" as listed in Table 2-1. The actual radionuclide release rate (the adjusted release rate) is the product of the user input release rate for a given radionuclide and the appropriate time step adjustment factor for particulates or radon. Table 2-2 lists the user release rate input, the particulate and radon adjustment factors for each of the four time steps, and the adjusted radionuclide release rates.

Table 2-1 Sample Test Case Emission Sources

Case No.	Source No.	Source Name	Source Type
1	1	Yellowcake Stack	Drying/Packaging Source
	2	Ore Pad	Area Source
	3	Grizzly Dump Hopper	Point Source
	4	Tailings Area 1	Area Source
	5	Tailings Area 2	Area Source
	6	Tailings Area 3	Area Source
2	1	Dryer Stack	Drying/Packaging Source
	2	New Well Field	New Well Field Source
	3	Production Well Field	Well Field Source
	4	Production Well Field – purge	ISR Purge Source
	5	Production Well Field – IX	ISR Ion Exchange Source
	6	Restoration Well Field	Well Field Source
	7	Restoration Well Field – purge	ISR Purge Source
	8	Land Application Area	Land Application Area Source
3a, 3b, 3c	1	Point Source 1	Point Source, same source term as the Grizzly Dump Hopper source in Case 1

Table 2-2 Calculated Radionuclide Release Rates for the Grizzly Dump Hopper

Nuclide	Release Rate Input (Ci/yr)	Adjusted Release Rate during Time Step (Ci/yr)			
		Time Step			
		1	2	3	4
U-238	0.026	0.0208	0.026	0.026	0.0234
U-234					
Th-230	0.026	0.0208	0.026	0.026	0.0234
Ra-226	0.026	0.0208	0.026	0.026	0.0234
Pb-210	0.026	0.0208	0.026	0.026	0.0234
Bi-210					
Po-210					
Th-232	0.0008	0.00064	0.0008	0.0008	0.00072
Ra-228	0.0008	0.00064	0.0008	0.0008	0.00072
Ac-228					
Th-228	0.0008	0.00064	0.0008	0.0008	0.00072
Ra-224					
Rn-222	42	33.6	42	42	37.8
Rn-220	1.5	1.2	1.5	1.5	1.35
Particulate adjustment factor		0.8	1	1	0.9
Radon adjustment factor		0.8	1	1	0.9

2.2 Area Source

In MILDOS, the particulate radionuclide release rate for an area source is dependent on the concentration of the radionuclide in the soil, the average emission (release) rate of particulate material per unit area, and the source area. Three types of area sources may be defined in MILDOS according to their geometry: circular, rectangular, or polygonal. Circular sources are defined by their radius (r) (area = πr^2), rectangular sources by their length (l) and width (w) (area = $l \times w$), and polygonal sources by the locations of their vertices, the area being calculated by the GIS module.

The Ore Pad in Case 1 is defined as a circular area source with a radius of 100 m. The area of the source is therefore πr^2 = 31,416 m^2, as is shown in the user interface and the standard results output. In MILDOS, the particulate emission rate can be either input directly by the user or estimated using the particulate erosion model. The particulate erosion model was used for the Ore Pad. Figure 2-1 shows the calculation of the particulate emission rate for the sixth wind

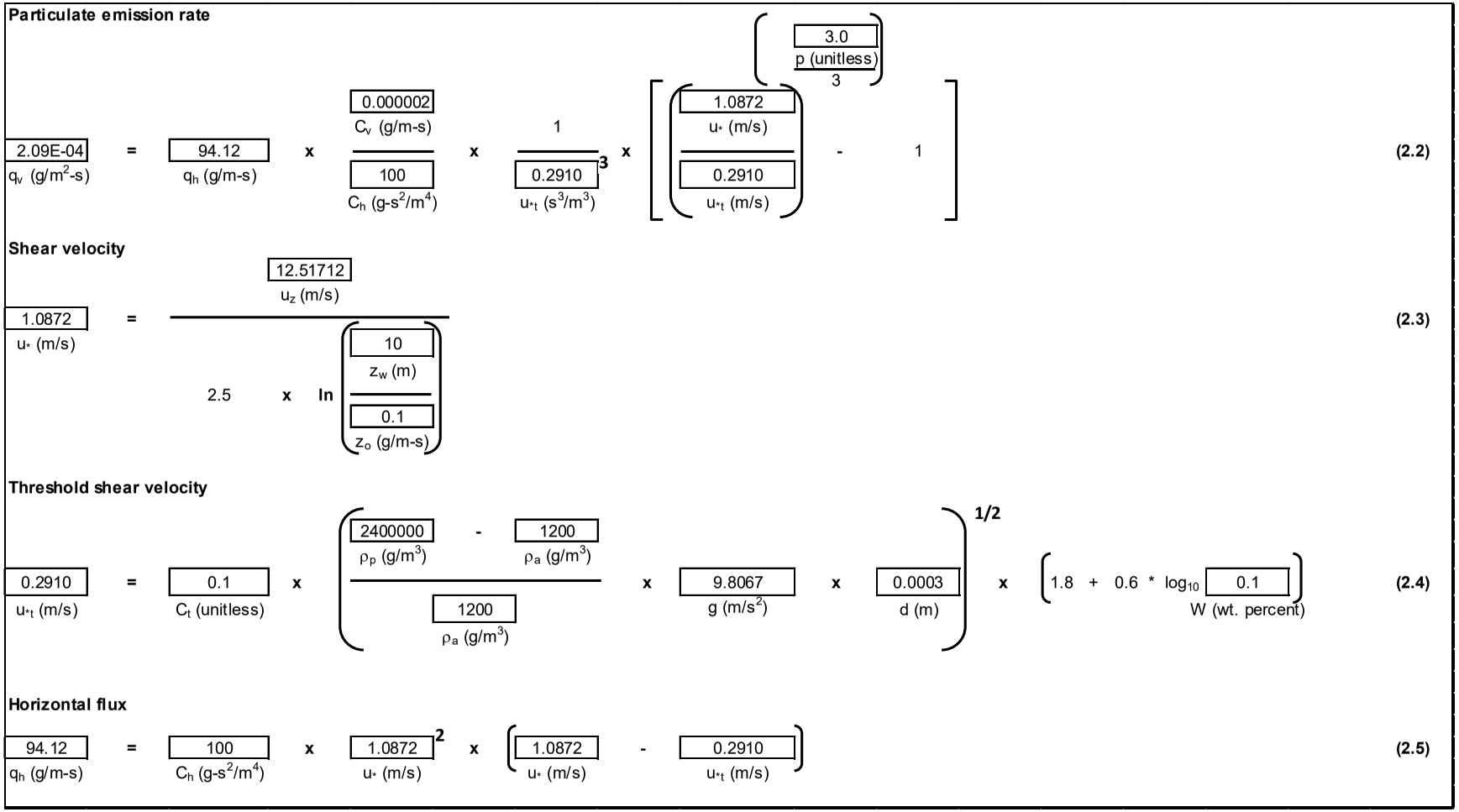

Figure 2-1 Hand Calculation of the Particulate Emission Rate (*qv*) from the Ore Pad for the Sixth Wind Speed Category in Case 1

speed category represented by a wind speed of 12.51 m/s. The total particulate emission rate (6.09×10^{-6} g/m^2-s) is based on the weighted average of the value calculated for each wind speed category. Table 2-3 lists the wind speed for each wind speed category, the particulate emission rate calculated for each wind speed, and the fraction of time that the wind is blowing at each wind speed (from the joint-frequency distribution data in the Case 1 user file). Figure 2-2 shows the particulate radionuclide release rate calculations according to Equation 2.1 in the manual. These values match those shown in the standard results output (Table heading – "Source Release Terms before Time Step Adjustment [Ci/y]") and are multiplied by the radon or radon adjustment factor for a given time step when estimating doses for that time step.

The dimensions of the Tailings Pile 1 rectangular area source are defined as 378 m by 378 m. The source area is therefore 142,884 m^2, which is correctly reported by the user interface and in the standard results output. A set of calculations for Tailings Pile 1 particulate radionuclide releases were performed similar to those shown in Figure 2-2 for the Ore Pad and compared with the standard results output for the Tailings Pile 1 source. The two sets of results matched.

For the Tailings Pile 3 polygonal area source, the area is reported as 840,000 m^3 as determined by the GIS module and reported in the user interface and the standard results output. This source can be decomposed to adjoining rectangles and right triangles, the areas of which can be calculated and summed to obtain the same value of 840,000 m^3.

A set of calculations for Tailings Pile 3 particulate radionuclide releases were performed similar to those shown in Figure 2-2 for the Ore Pad and compared with the standard results output for the Tailings Pile 3 source. The two sets of results matched.

Table 2-3 Particulate Emission Rate Data for Case 1[a]

Wind Speed[b] (m/s)	Fraction of Time at Speed[c]	Particulate Emission Rate[d] (g/m-s)
0.671	0.21091	0
2.459	0.27333	0
4.470	0.29776	3.98E-7
6.929	0.16841	9.76E-6
9.611	0.03979	5.75E-5
12.52	0.00976	2.09E-4

[a] For particle density of 2.4 gm/cm^3.
[b] MILDOS default wind speeds for each of the six wind speed categories.
[c] From joint frequency data in Case 1 user file.
[d] Calculated using the erosion model in the verification spreadsheet.

Particulate Radionuclide Release Rates from the Ore Pad

3.91E-03	=	647	x	6.09E-06	x	31416	x	31557600	x	1.00E-12	**(2.1)**
U-238 (Ci/yr)		U_a (pCi/g)		q_v (g/m^2-s)		A_s (m^2)		(s/yr)		(Ci/pCi)	
3.91E-03	=	647	x	6.09E-06	x	31416	x	31557600	x	1.00E-12	**(2.1)**
Th-230 (Ci/yr)		$Th\text{-}230_a$ (pCi/g)		q_v (g/m^2-s)		A_s (m^2)		(s/yr)		(Ci/pCi)	
3.91E-03	=	647	x	6.09E-06	x	31416	x	31557600	x	1.00E-12	**(2.1)**
Ra-226 (Ci/yr)		$Ra\text{-}226_a$ (pCi/g)		q_v (g/m^2-s)		A_s (m^2)		(s/yr)		(Ci/pCi)	
3.91E-03	=	647	x	6.09E-06	x	31416	x	31557600	x	1.00E-12	**(2.1)**
Pb-210 (Ci/yr)		$Pb\text{-}210_a$ (pCi/g)		q_v (g/m^2-s)		A_s (m^2)		(s/yr)		(Ci/pCi)	
1.03E-04	=	17	x	6.09E-06	x	31416	x	31557600	x	1.00E-12	**(2.1)**
Th-232 (Ci/yr)		$Th\text{-}232_a$ (pCi/g)		q_v (g/m^2-s)		A_s (m^2)		(s/yr)		(Ci/pCi)	
1.03E-04	=	17	x	6.09E-06	x	31416	x	31557600	x	1.00E-12	**(2.1)**
Ra-228 (Ci/yr)		$Ra\text{-}228_a$ (pCi/g)		q_v (g/m^2-s)		A_s (m^2)		(s/yr)		(Ci/pCi)	
1.03E-04	=	17	x	6.09E-06	x	31416	x	31557600	x	1.00E-12	**(2.1)**
Th-228 (Ci/yr)		$Th\text{-}228_a$ (pCi/g)		q_v (g/m^2-s)		A_s (m^2)		(s/yr)		(Ci/pCi)	

Figure 2-2 Hand Calculation of the Particulate Radionuclide Release Rates from the Ore Pad in Case 1

2.3 New Well Field Source

The amount of radon released during the installation of a new well field calculated by MILDOS is assumed to depend on the emission of radon from radium in the mud pits associated with the drilling of new wells. Thus, the release rate of radon depends on the concentration of radium in the ore (C_{oRa}), the emanating power for radon from radium in particulates (E_{Rn222} or E_{Rn220}), the amount of material in each mud pit (M_{ore}), the storage time in the mud pit (t_{pit}), and the number of mud pits generated per year (N_{pit}). The new well field source in Case 2 is identified as New Well Field. The calculations for the release rates of Rn-222 and Rn-220 are shown in Figure 2-3. Both release rate values match those in the standard results output for Case 2.

New Well Field Source Release Rates

2.71E-02	=	1.00E-12	x	0.25	x	0.181	x	300	x	10	x	4750000	x	42	**(2.7)**
$Rn222_{nw}$ (Ci/yr)		(Ci/pCi)		E_{Rn222} (unitless)		λ_{Rn222} (1/d)		C_{oRa226} (pCi/g)		t_{pit} (d)		M_{ore} (g)		N_{pit} (1/yr)	
3.22E+00	=	1.00E-12	x	0.15	x	1077	x	10	x	10	x	4750000	x	42	**(2.8)**
$Rn220_{nw}$ (Ci/yr)		(Ci/pCi)		E_{Rn220} (unitless)		λ_{Rn220} (1/d)		C_{oRa224} (pCi/g)		t_{pit} (d)		M_{ore} (g)		N_{pit} (1/yr)	

Figure 2-3 Hand Calculation of the Radon Release Rates from the New Well Field in Case 2

2.4 Well Field Related Sources

The amount of radon released from production and restoration well fields may be generated by up to three sources: well venting, purge water, and ion exchange resin unloading. All three processes depend on the radon concentration in the process water circulating through the well field. The radon concentration depends on the fraction of the radon source in the circulating water (f_{Rn}); the emanation power and decay constant (λ_{Rn222} or λ_{Rn220}) of radon; the concentration

of radium in the ore ([Ra-226] or [Ra-224]); the active area of the ore zone (A); the average thickness of the ore zone (D); the bulk density of the ore material (ρ); the vent rate of radon (v_{Rn}); the volume of water circulating through the well field (V); the purge rate of treated water (F_p); and the water discharge rate from resin unloading (F_{ix}) if applicable.

The well field source type in MILDOS 4 is associated with the well venting release of radon and is considered to be an area source. The purge water and ion exchange source types are considered to be point sources, and each must be associated with a well field source because the amount of radon released is dependent on the water from that well field source. Typically, both production and restoration well fields will be associated with at least one purge source, and a production well field will be associated with at least one ion exchange source.

The concentrations of Rn-222 and Rn-220 in the production well field process water for Case 2 were estimated as shown in the top of Figure 2-4. These concentrations were then used in the estimation of radon releases from the purge water, the venting process, and the ion exchange unloading as shown in the lower portion of Figure 2-4. The total radon releases are the sum of these processes as shown in Figure 2-5. The estimated total release of 1,092 Ci/yr of Rn-222 and 23.9 Ci/yr of Rn-220 match the standard output results for Case 2.

Operation of a restoration well field is similar to that for the production well field. In this instance, there is no contribution to the radon release rate from the unloading of ion exchange resin, and the restoration activities may not run continuously throughout the year. Figure 2-6 presents the calculation of the radon release rates from the restoration well field for Case 2. As can be seen, the estimated total release of 683 Ci/yr of Rn-222 and 14.4 Ci/yr of Rn-220 match the standard output results for Case 2.

2.5 Drying/Packaging Source

Estimation of the amount of activity in particulate matter that escapes from a drying/packaging source depends on the daily production rate of yellowcake at the facility (R_{YC}); the fraction released to the stack (f_s); the amount of U-238 in yellowcake; the specific activity of U-238 ($U238_{sa}$); and the fractional amounts of Th-238, Ra-226, and Pb-210 relative to the release amount of U-238 ($Th238_{dp}$, $Ra226_{dp}$, and $Pb210_{dp}$, respectively). Because isolated yellowcake (U_3O_8) is modeled, the contribution from U-238 daughter nuclides will be small, and no thorium ore radionuclides are considered in MILDOS for this type of source. Calculations for the activity released from the yellowcake stack source modeled in Case 1 are provided in Figure 2-7.

2.6 Land Application Source

The emitted activity from a land application source depends on the past irrigation of the subject source area with water containing low levels of radionuclides and the retention of any radionuclides by the soil. Emission of the activity is assumed to occur via wind erosion of the contaminated soil.

To estimate the radionuclide concentration in the soil, a number of parameters are required including the concentration of the radionuclide in the irrigation water (C_{iw}); the water application rate (R_w); the source area (A_s); the depth of soil penetration (D_s); the soil bulk density (ρ_s); the number of time steps considered and their duration (t_{si}) for the ith time step; the particulate source term adjustment factor for each time step (P_{Ai}); the soil volume water content (w); decay constants to account for radioactive decay (λ_i) and for environmental loss from the soil (λ_e); and the radionuclide distribution coefficient for soil (K_d).

Radon Concentration in Circulating 'Production Well Field' Water

$$C_{wRn222}\ (pCi/L) = \frac{1.00E{+}06\ (cm^3/m^3) \times C_{oRa226}\ (300\ pCi/g) \times A\ (270000\ m^2) \times D\ (7\ m) \times \rho\ (1.8\ g/cm^3) \times E_{Rn222}\ (0.25\ unitless) \times \lambda_{Rn222}\ (0.181\ 1/d) \times f_{Rn}\ (0.8\ unitless)}{\left(\lambda_{Rn222}\ (0.181\ 1/d) + v_{Rn}\ (0.001\ 1/d)\right) \times V_c\ (1850000\ L) + F_p\ (18500\ L/d) + F_{ix}\ (10560\ L/d)} = 1.01E{+}08 \quad (2.14)$$

$$C_{wRn220}\ (pCi/L) = \frac{1.00E{+}06\ (cm^3/m^3) \times C_{oRa224}\ (10\ pCi/g) \times A_o\ (270000\ m^2) \times D_o\ (7\ m) \times \rho_o\ (1.8\ g/cm^3) \times E_{Rn220}\ (0.15\ unitless) \times \lambda_{Rn220}\ (1077\ 1/d) \times f_{Rn}\ (0.8\ unitless)}{\left(\lambda_{Rn220}\ (1077\ 1/d) + v_{Rn}\ (0.001\ 1/d)\right) \times V_c\ (1850000\ L) + F_p\ (18500\ L/d) + F_{ix}\ (10560\ L/d)} = 2.21E{+}06 \quad (2.15)$$

Radon Release Rates from Associated Purge Water (point source)

$$Rn222_w\ (Ci/yr) = 1.00E{-}12\ (Ci/pCi) \times C_{wRn222}\ (1.01E{+}08\ pCi/L) \times F_p\ (18500\ L/d) \times d_{op}\ (350\ d/yr) = 6.54E{+}02 \quad (2.16)$$

$$Rn220_w\ (Ci/yr) = 1.00E{-}12\ (Ci/pCi) \times C_{wRn220}\ (2.21E{+}06\ pCi/L) \times F_p\ (18500\ L/d) \times d_{op}\ (350\ d/yr) = 1.43E{+}01 \quad (2.17)$$

Radon Release Rates from Associated Venting (area source)

$$Rn222_v\ (Ci/yr) = 1.00E{-}12\ (Ci/pCi) \times v_{Rn}\ (0.001\ 1/d) \times C_{wRn222}\ (1.01E{+}08\ pCi/L) \times V_c\ (1850000\ L) \times d_{op}\ (350\ d/yr) = 6.54E{+}01 \quad (2.18)$$

$$Rn220_v\ (Ci/yr) = 1.00E{-}12\ (Ci/pCi) \times v_{Rn}\ (0.001\ 1/d) \times C_{wRn220}\ (2.21E{+}06\ pCi/L) \times V_c\ (1850000\ L) \times d_{op}\ (350\ d/yr) = 1.43E{+}00 \quad (2.19)$$

Radon Release Rates From Associated Ion Exchange Unloading (point source)

$$F_{ix}\ (L/d) = N_{ix}\ (2\ 1/d) \times V_{ix}\ (13200\ L) \times P_{ix}\ (0.4\ unitless) = 10560 \quad (2.13)$$

$$Rn222_{ix}\ (Ci/yr) = 1.00E{-}12\ (Ci/pCi) \times C_{wRn222}\ (1.01E{+}08\ pCi/L) \times F_{ix}\ (10560\ L/d) \times d_{op}\ (350\ d/yr) = 3.73E{+}02 \quad (2.20)$$

$$Rn220_{ix}\ (Ci/yr) = 1.00E{-}12\ (Ci/pCi) \times C_{wRn220}\ (2.21E{+}06\ pCi/L) \times F_{ix}\ (10560\ L/d) \times d_{op}\ (350\ d/yr) = 8.16E{+}00 \quad (2.21)$$

Figure 2-4 Hand Calculation of the Component Radon Releases from the Production Well Field in Case 2

Total Radon Release Rates from the Production Well Field

1.09E+03	=	6.54E+02	+	6.54E+01	+	3.73E+02	
$Rn222_{pw}$ (Ci/yr)		$Rn222_{w}$ (Ci/yr)		$Rn222_{v}$ (Ci/yr)		$Rn222_{ix}$ (Ci/yr)	
2.39E+01	=	1.43E+01	+	1.43E+00	+	8.16E+00	
$Rn220_{pw}$ (Ci/yr)		$Rn220_{w}$ (Ci/yr)		$Rn220_{v}$ (Ci/yr)		$Rn220_{ix}$ (Ci/yr)	

Figure 2-5 Hand Calculation of the Total Radon Release Rates from the Production Well Field in Case 2

Figure 2-8 presents the calculations to estimate the emission of Ra-226 from the land application area at time step 4. The overall decay constant for Ra-226 is first calculated for later use in calculating the soil concentration. A retardation factor of 22,600 (Equation 2.28) is estimated for calculating the fraction of Ra-226 in the applied water in the soil – a value of 1 as determined by Equation 2.27. This value is then used in Equation 2.30 to calculate a concentration of 0.00789 pCi/g of Ra-226 in the irrigated soil at time step 4. The emission rate of Ra-226 is then calculated using Equation 2.1 to obtain 6.11E-14 Ci/s.

Because, unlike the other source types, the release rate of radionuclides from a land application source depends on the current and previous time steps, these intermediate results are not stored in the user file. To verify the calculated emission rate, it was multiplied by the normalized air concentration at the north fence line (taken from the Case 2 interactive results output) to obtain the direct air concentration of Ra-226 due to the land application area at that receptor location. Since the air concentrations reported by MILDOS include contributions from resuspension of previously deposited material, the Case 2 input was run with the resuspension deposition velocity set to 1E-5 m/s (its minimum value) to essentially zero out the resuspension contribution to the air concentration. The verification result of 1.42E-20 Ci/m^3 for the Ra-226 air concentration as shown at the bottom of Figure 2-8 matched the result obtained for the Ra-226 concentration for time step 4 when resuspension is not considered.

Radon Concentration in Circulating 'Restoration Well Field' Water

$$C_{wRn222}\ (pCi/L) = \frac{1.00E{+}06\ (cm^3/m^3) \times 300\ C_{oRa226}\ (pCi/g) \times 270000\ A_o\ (m^2) \times 7\ D_o\ (m) \times 1.8\ \rho_o\ (g/cm^3) \times 0.25\ E_{Rn222}\ (unitless) \times 0.181\ \lambda_{Rn222}\ (1/d) \times 0.8\ f_{Rn}\ (unitless)}{\left(0.181\ \lambda_{Rn222}\ (1/d) + 0.001\ v_{Rn}\ (1/d)\right) \times 1850000\ V_c\ (L) + 16000\ F_p\ (L/d)} \quad \textbf{(2.14)}$$

$$C_{wRn220}\ (pCi/L) = \frac{1.00E{+}06\ (cm^3/m^3) \times 10\ C_{oRa224}\ (pCi/g) \times 270000\ A_o\ (m^2) \times 7\ D_o\ (m) \times 1.8\ \rho_o\ (g/cm^3) \times 0.15\ E_{Rn220}\ (unitless) \times 1077\ \lambda_{Rn220}\ (1/d) \times 0.8\ f_{Rn}\ (unitless)}{\left(1077\ \lambda_{Rn220}\ (1/d) + 0.001\ v_{Rn}\ (1/d)\right) \times 1850000\ V_c\ (L) + 16000\ F_p\ (L/d)} \quad \textbf{(2.15)}$$

Radon Release Rates from Associated Purge Water

$$Rn222_w\ (Ci/yr) = 1.00E{-}12\ (Ci/pCi) \times C_{wRn222}\ (pCi/L) \times F_p\ (L/d) \times d_{op}\ (d/yr) \quad \textbf{(2.16)}$$

$$Rn220_w\ (Ci/yr) = 1.00E{-}12\ (Ci/pCi) \times C_{wRn220}\ (pCi/L) \times F_p\ (L/d) \times d_{op}\ (d/yr) \quad \textbf{(2.17)}$$

Radon Release Rates from Associated Venting

$$Rn222_v\ (Ci/yr) = 1.00E{-}12\ (Ci/pCi) \times v_{Rn}\ (1/d) \times C_{wRn222}\ (pCi/L) \times V_c\ (L) \times d_{op}\ (d/yr) \quad \textbf{(2.18)}$$

$$Rn220_v\ (Ci/yr) = 1.00E{-}12\ (Ci/pCi) \times v_{Rn}\ (1/d) \times C_{wRn220}\ (pCi/L) \times V_c\ (L) \times d_{op}\ (d/yr) \quad \textbf{(2.19)}$$

Figure 2-6 Hand Calculation of the Radon Releases from the Restoration Well Field in Case 2

Drying / Packaging Source Release Rates

7.15E-02	=	365.25	x	700	x	848	x	3.3E-07	x	1.0E-03		**(2.22)**
$U238_{dp}$ (Ci/yr)		(d/yr)		R_{YC} (kg/d)		(g U /kg U_3O_8)		$U238_{sa}$ (Ci/g)		f_s (unitless)		
3.58E-04	=	7.15E-02	x	0.005								**(2.23)**
$TH230_{dp}$ (Ci/yr)		$U238_{dp}$ (Ci/yr)		f_{Th} (unitless)								
3.58E-04	=	7.15E-02	x	0.005								**(2.24)**
$RA226_{dp}$ (Ci/yr)		$U238_{dp}$ (Ci/yr)		f_{Ra} (unitless)								
3.58E-04	=	7.15E-02	x	0.005								**(2.25)**
$PB210_{dp}$ (Ci/yr)		$U238_{dp}$ (Ci/yr)		f_{others} (unitless)								

Figure 2-7 Hand Calculation of the Annual Activity Released from the Yellowcake Stack in Case 1

Decay Constant for Ra-226

$$\underset{\lambda\ (1/yr)}{1.43E\text{-}02} = \underset{\lambda_i\ (1/yr)}{4.33E\text{-}04} + \underset{\lambda_e\ (1/yr)}{1.39E\text{-}02}$$

Retardation Factor

$$\underset{R_d\ (unitless)}{2.26E+04} = 1 + \frac{\underset{\rho_s\ (g/cm^3)}{1.6} \times \underset{K_d\ (cm^3/g)}{3533}}{\underset{w\ (unitless)}{0.25}} \qquad \textbf{(2.28)}$$

Fraction of Radionuclides in the Applied Water in the Soil

$$\underset{F_s\ (unitless)}{1.00E+00} = 1 - \frac{1}{\underset{R_d\ (unitless)}{2.26E+04}} \qquad \textbf{(2.27)}$$

Soil Concentration of Ra-226 from Water Irrigation at the End of Time Step 4

$$\underset{C_{sw}(Ra226,t_4)\ (pCi/g)}{7.89E\text{-}03} = \frac{\underset{C_{iw}(Ra226)(pCi/L)}{30} \times \underset{R_w\ (L/yr)}{6752500} \times \underset{F_s\ (unitless)}{1.00E+00}}{\underset{(cm^3/m^3)}{1E+06} \times \underset{A_s\ (m^2)}{250000} \times \underset{D_s\ (m)}{0.15} \times \underset{\rho_s\ (g/cm^3)}{1.6}} \times$$

$$\left[\underset{P_{A1}\ (unitless))}{0.00E+00} \times \underset{t_{s1}\ (yr)}{1.00} \times \exp\left[-\underset{\lambda\ (1/yr)}{1.43E\text{-}02} \times \left(\underset{t_4\ (yr)}{4.00} - \underset{t_1\ (yr)}{1.00}\right)\right] + \right.$$

$$\underset{P_{A2}\ (unitless))}{1.00E\text{-}01} \times \underset{t_{s2}\ (yr)}{1.00} \times \exp\left[-\underset{\lambda\ (1/yr)}{1.43E\text{-}02} \times \left(\underset{t_4\ (yr)}{4.00} - \underset{t_2\ (yr)}{2.00}\right)\right] +$$

$$\underset{P_{A3}\ (unitless))}{3.00E\text{-}01} \times \underset{t_{s3}\ (yr)}{1.00} \times \exp\left[-\underset{\lambda\ (1/yr)}{1.43E\text{-}02} \times \left(\underset{t_4\ (yr)}{4.00} - \underset{t_3\ (yr)}{3.00}\right)\right] +$$

$$\left.\underset{P_{A4}\ (unitless))}{0.5} \times \underset{t_{s4}\ (yr)}{1.00E+00} \times \frac{1 - \exp\left[-\left(\underset{\lambda\ (1/yr)}{1.43E\text{-}02} \times \underset{t_4\ (yr)}{4.00}\right)\right]}{\underset{\lambda\ (1/yr)}{1.43E\text{-}02}}\right] \qquad \textbf{(2.30)}$$

Radionuclide Emission Rate of Ra-226 from Land Application Area Source at Time Step 4

$$\underset{Ra\text{-}226\ (Ci/s)}{6.11E\text{-}14} = \underset{Ra\text{-}226_a\ (pCi/g)}{7.89E\text{-}03} \times \underset{q_v\ (g/m^2\text{-}s)}{3.10E\text{-}05} \times \underset{A_s\ (m^2)}{250000} \times \underset{(Ci/pCi)}{1.00E\text{-}12} \qquad \textbf{(2.1)}$$

Direct Air Concentration from the Land Application Area Source at the North Fence Line at Time Step 4

$$\underset{C_{sec}(i,x)\ (Ci/m^3)}{1.42E\text{-}20} = \underset{Ra\text{-}226\ (Ci/s)}{6.11E\text{-}14} \times \underset{X/Q\ (s/m^3)}{2.32E\text{-}07}$$

Figure 2-8 Hand Calculation of the Activity Released from the Land Application Area in Case 2 at Time Step 4 (3 micron)

3 ATMOSPHERIC DISPERSION

This Section examines the calculations used to estimate the downwind dispersion of gases and particulates. The outcome is the (direct) normalized air concentration of a gas or a specific particulate plume at a given receptor location. Note that in the case of particulates for which ground concentrations are calculated (see Table 2-1 in the manual), the total air concentration at the receptor location includes a contribution from resuspension. The air concentration contribution from resuspension is covered in Section 4.2.1.

The calculated air concentration for a specific particle size from a specific source at a specific receptor location is the sum of the weighted averages of the fraction of time (frequency) that the wind is blowing in the direction of the receptor from the source at particular wind speed/weather stability class combinations. Knowing the radionuclide concentration per mass of particulate, the radionuclide concentration can then be calculated. To check the proper downwind air concentrations of radionuclides, the scenarios in the Case 3a, Case 3b, and Case 3c example files are used to check the proper calculation of downwind radionuclide concentrations at the individual receptors all located at a distance of 1 km from the source. The Case 3a file has a single point source with a single receptor at a distance of 1 km in each of the 16 directions used in the model. Each direction has only one stability class/wind speed value assigned in the joint frequency distribution data.

The sample calculations covered in the following sections review the calculations to estimate the effective release height (Section 3.1) and the radionuclide concentrations from the Gaussian plume model used in the code (Section 3.2) for a given radionuclide/particle size for a given stability class/wind speed combination. To show the proper summation of results from multiple stability class/wind speed combinations for the same direction, the sum of results from all 16 receptors in Case 3a are compared with the air concentration results from Case 3b where only one receptor at 1 km is considered using the same stability class/wind speed combinations from Case 3a, but all occurring in the direction of the one receptor.

3.1 Effective Release Height

In Case 3a, a point source with a momentum driven plume rise involving the release of particulates having a distribution set of 30 percent with a 7.7 μm diameter and 70 percent with a 54 μm diameter is evaluated. The first equation in Figure 3-1 evaluates the plume's effective release height (H; 17.7 m) of the 7.7 μm diameter particulates at a distance of 1,000 m. The effective release height is a function of the release height (h; 15 m), plume rise due to the plume's momentum at the release location (Δh; 3.28 m), vertical settling (h_v; 0.57 m), and any correction due to the receptor's elevation relative to the source (0 m). Both the momentum plume rise and the vertical settling of the plume depend on the effective wind speed (U_H) as calculated (7.55 m/s) for the receptor location.

The parallel set of calculations for the effective release height and wind speed for the 54 μm particulates is presented in Figure 3-2. In this instance, the heavier particulates cause substantial settling of the plume with the effective plume height limited to ground level (0 m) for the receptor location.

Effective Release Height

17.71 H (m) = max (15.00 h (m) + 3.28 Δh (m) - 0.57 h_v (m), 0)

- (1 - 0.50 P_c (unitless)) x min (max (17.71 h+Δh-h_v , 0) , max (0 , -11.00 E_r - E_p) (m) **(3.1)**

Plume (Vertical) Settling

$$0.57\ h_v\ (m) = \frac{1000\ x\ (m) \times 0.00427\ V_s\ (m/s)}{7.55\ U_H\ (m/s)} \quad \textbf{(3.10)}$$

$$0.00427\ V_s\ (m/s) = 3 \times 10^{-5} \times 7.70^{2}\ d_p\ (\mu m) \times 2.40\ \rho_p\ (g/cm^3) \quad \textbf{(3.11)}$$

Plume Rise

Momentum Driven Plume

$$3.28\ \Delta h\ (m) = 1.5 \times \frac{11\ v_s\ (m/s) \times 1.5\ d_s\ (m)}{7.55\ U_H\ (m/s)} \quad \textbf{(3.2)}$$

Effective Wind Speed

If H <= 10 m

N/A U_H (m/s) = 6.93 U_a (m/s)

else

$$7.55\ U_H\ (m/s) = 6.93\ U_a\ (m/s) \times \left[\frac{17.71\ H\ (m)}{10.00\ z_a\ (m)}\right]^{0.15\ p} \quad \textbf{(3.12)}$$

N/A = Not applicable.

Figure 3-1 Hand Calculation of the Effective Wind Speed and Release Height for 7.7 μm Particulates at the N Receptor Location in Case 3a for the Momentum-Driven Plume

Effective Release Height

0.00 H (m) = max (15.00 h (m) + 3.57 Δh (m) - 30.30 h_v (m), 0)

- (1 - 0.50 P_c (unitless)) x min (max (-11.72 $h+\Delta h-h_v$, 0) , max (0 , -11.00 $E_r - E_p$) (m) **(3.1)**

Plume (Vertical) Settling

$$30.30\ h_v\ (m) = \frac{1000\ x\ (m) \times 0.20995\ V_s\ (m/s)}{6.93\ U_H\ (m/s)} \quad \textbf{(3.10)}$$

$$0.210\ V_s\ (m/s) = 3 \times 10^{-5} \times 54.00^2\ d_p\ (\mu m) \times 2.40\ \rho_p\ (g/cm^3) \quad \textbf{(3.11)}$$

Plume Rise

Momentum Driven Plume

$$3.57\ \Delta h\ (m) = 1.5 \times \frac{11\ v_s\ (m/s) \times 1.5\ d_s\ (m)}{6.93\ U_H\ (m/s)} \quad \textbf{(3.2)}$$

Effective Wind Speed

If H <= 10 m

6.93 U_H (m/s) = 6.93 U_a (m/s)

else

$$N/A\ U_H\ (m/s) = 6.93\ U_a\ (m/s) \times \left[\frac{0.00\ H\ (m)}{10.00\ z_a\ (m)}\right]^{0.15\ p} \quad \textbf{(3.12)}$$

N/A = Not applicable.

Figure 3-2 Hand Calculation of the Effective Wind Speed and Release Height for 54 μm Particulates at the N Receptor Location in Case 3a for the Momentum-Driven Plume

As a check on buoyant plume rise calculations, a second set of parallel calculations for the effective release height and wind speed for the 7.7 μm particulates were conducted (Case 3c) using a buoyant plume rather than the momentum driven plume. The resulting values were 20.8 m and 7.74 m/s for the effective release height and wind speed, respectively, and 6.36 m for the buoyancy induced plume rise as shown in Figures 3.3 and 3.4.

Effective Release Height

20.81 (H (m)) = max (15.00 (h (m)) + 6.36 (Δh (m)) - 0.55 (h_v (m)), 0)

- (1 - 1.00 (P_c (unitless))) x min (max (20.81 ($h+\Delta h-h_v$), 0) , max (0 , -15.00 ($E_r - E_p$)) (m) **(3.1)**

Plume (Vertical) Settling

$$0.55\ (h_v\ (m)) = \frac{1000\ (x\ (m)) \times 0.00427\ (V_s\ (m/s))}{7.74\ (U_H\ (m/s))} \quad \textbf{(3.10)}$$

$$0.004\ (V_s\ (m/s)) = 3 \times 10^{-5} \times 7.70^{2}\ (d_p\ (\mu m)) \times 2.40\ (\rho_p\ (g/cm^3)) \quad \textbf{(3.11)}$$

Plume Rise

Momentum Driven Plume

$$N/A\ (\Delta h\ (m)) = 1.5 \times \frac{11\ (v_s\ (m/s)) \times 1.5\ (d_s\ (m))}{7.74\ (U_H\ (m/s))} \quad \textbf{(3.2)}$$

Effective Wind Speed

If H <= 10 m

N/A (U_H (m/s)) = 6.93 (U_a (m/s))

else

$$7.74\ (U_H\ (m/s)) = 6.93\ (U_a\ (m/s)) \times \left[\frac{20.81\ (H\ (m))}{10.00\ (z_a\ (m))} \right]^{0.15\ (p)} \quad \textbf{(3.12)}$$

N/A = Not applicable.

Figure 3-3 Hand Calculation of the Effective Wind Speed and Release Height for 7.7 μm Particulates at the N Receptor Location in Case 3c for the Buoyancy-Induced Plume

Buouancy Induced Plume
Unstable/Neutral Conditons (A-D)

x <= 10 x stack height

$$\underset{\Delta h\ (m)}{\boxed{N/A}} = \frac{1.6}{\underset{U_H\ (m/s)}{\boxed{7.74}}} \times [\ 3.7 \times 10^{-5}\ (m^4/cal\text{-}s^2) \times \underset{Q_h\ (cal/s)}{\boxed{35000}} \times \underset{x^2\ (m^2)}{\boxed{1000000}}\ ]^{1/3} \quad \textbf{(3.3)}$$

x > 10 x stack height

$$\underset{\Delta h\ (m)}{\boxed{6.36}} = \frac{1.6}{\underset{U_H\ (m/s)}{\boxed{7.74}}} \times [\ 3.7 \times 10^{-5}\ (m^4/cal\text{-}s^2) \times \underset{Q_h\ (cal/s)}{\boxed{35000}} \times 100 \times \underset{h^2\ (m^2)}{\boxed{225.00}}\ ]^{1/3} \quad \textbf{(3.4)}$$

Stable Conditions (E,F)

Still expanding [$x <= 2.4\ (U_H/s^{1/2})$ and $U >= U_{test}$]

$$\underset{\Delta h\ (m)}{\boxed{N/A}} = \frac{1.6}{\underset{U_H\ (m/s)}{\boxed{7.74}}} \times [\ 3.7 \times 10^{-5}\ (m^4/cal\text{-}s^2) \times \underset{Q_h\ (cal/s)}{\boxed{35000}} \times \underset{x^2\ (m^2)}{\boxed{1000000}}\ ]^{1/3} \quad \textbf{(3.5)}$$

Far limit [$x > 2.4\ (U_H/s^{1/2})$ and $U >= U_{test}$]

$$\underset{\Delta h\ (m)}{\boxed{N/A}} = 2.9 \times \left[\frac{3.7 \times 10^{-5}\ (m^4/cal\text{-}s^2) \times \underset{Q_h\ (cal/s)}{\boxed{35000}}}{\underset{U_H\ (m/s)}{\boxed{7.74}} \times \underset{s\ (s^{-2})}{\boxed{0.001213}}} \right]^{1/3} \quad \textbf{(3.6)}$$

Light wind, vertical rise ($U < U_{test}$)

$$\underset{\Delta h\ (m)}{\boxed{N/A}} = 5.0 \times \frac{[\ 3.7 \times 10^{-5}\ (m^4/cal\text{-}s^2) \times \underset{Q_h\ (cal/s)}{\boxed{35000}}\ ]^{1/4}}{[\ \underset{s\ (s^{-2})}{\boxed{0.001213}}\ ]^{3/8}} \quad \textbf{(3.7)}$$

s: stability parameter [$g/T * d\theta/dz$]

$$\underset{s\ (s^{-2})}{\boxed{0.001213}} = \frac{\underset{g\ (m/s^2)}{9.80665}}{\underset{T_a(^oK)}{\boxed{283}}} \times \underset{dT/dz + I\ (^oK/m)}{\boxed{0.035}} \quad \textbf{(3.8)}$$

wind speed cut-off

$$\underset{U_{test}\ (m/s)}{\boxed{0.089862}} = 0.195 \times [3.7 \times 10^{-5}\ (m^4/cal\text{-}s^2) \times \underset{Q_h\ (cal/s)}{\boxed{35000}}\ ]^{1/4} \times [\ \underset{s\ (s^{-2})}{\boxed{0.001213}}\ ]^{1/8} \quad \textbf{(3.9)}$$

N/A = Not applicable.

Figure 3-4 Hand Calculation of the Buoyancy-Induced Plume Rise in Case 3c for 7.7 μm Particulates

3.2 Downwind Direct Air Concentrations

3.2.1 No Plume Reflection

As shown in Figure 3-5 for Case 3a, the downwind air concentration of Ra-226 in the 7.7 μm particulates is first calculated to be 5.68E-15 Ci/m^3 without adjustments for the fraction of that particulate size released, the particulate adjustment factor (P_A), and the wind frequency in the direction of the receptor. As determined using Equation 3.18, plume reflection is not considered (i.e., at a distance of 1,000 m, the plume has not reached the lid [mixing layer] height) for the atmospheric conditions considered (D stability, 6.93 m/s wind speed). The downwind depleted source strength (Q_{xi}) of 7.90E-10 Ci/s for Ra-226 used in Equation 3.26 depends on the original source term release rate (Q_{0i}; 0.026 Ci/yr/3.15E-7 s/yr = 8.24E-10 Ci/s) and wet and dry deposition from the plume out to the receptor location.

The calculation for the depleted source strength is shown in Figure 3-6. Wet deposition depends on the washout coefficient (V_w; 0.000126 /s), the rainfall rate (R; 0.1255 mm/h), the distance between source and receptor (x; 1,000 m), and the effective wind speed (U_H; 7.55 m/s). Dry deposition depends on the deposition velocity (V_{dp}; 0.01 m/s), the effective wind speed, and the no-mixing plume integral of $F(x)$ as shown Equation 3.30. The F(x) is an integral from 0 to x involving the effective release height (H) and the vertical dispersion coefficient (σ_z).

$$F(x) = \frac{\exp\left(\frac{-H^2}{2\sigma_z^2}\right)}{\sigma_z}, \tag{3.30}$$

The calculated value of the $F(x)$ integral was performed in the "hand calculation" verification spreadsheet by evaluating $F(x)$ and its component values at 1 m intervals from 1 to 1,000 m (from the source to the receptor) and the results for $F(x)$ summed.

As shown at the bottom of Figure 3-5, the final value of 8.52E-17 Ci/m^3 for the direct downwind Ra-226 air concentration from 7.7 μm particulates at the N Receptor location is obtained by multiplying the unadjusted value of 5.68E-15 Ci/m^3 by the fraction of release composed of 7.7 μm particulates (0.3), the particulate adjustment fraction for time step 1 (0.8), and the fraction of time that the wind is blowing in the direction of the receptor (0.0625). This result is in excellent agreement with the value of 8.53E-17 Ci/m^3 in the Case 3a results.

For Ra-226 in the 54 μm particulate fraction in Case 3a, the calculation of downwind air concentration is presented in Figure 3-7, and the supporting depleted source strength calculation is shown in Figure 3-8. As seen in Figure 3-7, the plume does not reach the plume mixing region at the N Receptor location, as was the same for the 7.7 μm fraction. For calculation of the depleted source strength (Equation 3.35 in Figure 3-8), the deposition velocity is set equal to the settling velocity any time that the settling velocity exceeds 0.01 m/s, as discussed in Section 3.6.1.

The deposition velocity in this instance is set to 0.210 m/s, the value of the settling velocity as calculated using Equation 3.11 shown in Figure 3-2. The final value for the direct downwind Ra-226 air concentration from 54 μm particulates is 1.01E-16 Ci/m^3 for time step 1 at the N Receptor location, in excellent agreement with the value of 1.00E-16 Ci/m^3 obtained in Case 3a using the code.

Plume reflection not considered if

$$\sigma_z(x) <= \frac{(1 - 17.71/1000)^{1/2}}{1.2} \times 1000 = 825.9 \text{ [TRUE]} \quad (3.18)$$

(17.71 = H (m); 1000 = L (m); 1000 = L (m); 825.9 = $\sigma_{z,no\text{-}mix}$ (m))

Then

$$199 = 1000.00 \times \tan(11.25^{o}) \quad (3.23)$$

(y_{sec} (m); x (m))

$$5.68E\text{-}15 = \frac{7.90E\text{-}10}{(2\pi)^{1/2} \times 31.5 \times 7.55 \times 198.91} \times \exp\left(\frac{-3.14E+02}{2 \times 9.94E+02}\right) \quad (3.26)$$

(C_{sec}(i,x) if no mixing (Ci/m^3); Q_{xi} (Ci/s); σ_z (m); U_H (m/s); y_{sec} (m); H^2 (m^2); σ_z^2 (m^2))

Else a uniform distribution may be assumed if

$$0 <= 17.71/1000 < 0.5 \text{ [TRUE]}$$

(H_{eff} (m); L (m))

and

$$\sigma_z(x) >= 1000 \times [-2.37 \times 17.71/1000)^2 + 0.489 \times (17.71/1000) + 0.756] = 763.9 \text{ [FALSE]} \quad (3.19)$$

(L (m); H_{eff} (m); $\sigma_{z,mix}$ (m))

OR

$$0.5 <= 17.71/1000 < 1.0 \text{ [FALSE]}$$

(H_{eff} (m); L (m))

and

$$\sigma_z(x) >= 1000 \times [-2.37 \times 17.71/1000)^2 + 4.25 \times (17.71/1000) - 1.13] = -1055.5 \text{ [TRUE]} \quad (3.20)$$

(L (m); H_{eff} (m); $\sigma_{z,mix}$ (m))

Then

$$N/A = \frac{8.09E\text{-}10}{2 \times 198.91 \times 7.55 \times 1000} \quad (3.28)$$

(C_{sec}(i,x) if mixing (Ci/m^3); Q_{xi} (Ci/s); y_{sec} (m); U_{eff} (m/s); L (m))

Else a linear interpolation between 3.26 and 3.28 is used

The fraction of the non-mixing concentration is given by:

$$1.000 = \frac{31.5 - 825.9}{763.9 - 825.9}$$

(FracNoMix; σ_z (m); $\sigma_{z,no\text{-}mix}$ (m); $\sigma_{z,mix}$ (m); $\sigma_{z,no\text{-}mix}$ (m))

and the interpolated time-integrated ground-level air concentration is

$$N/A = 1.0 \times 5.68E\text{-}15 + (1 - 1.000) \times N/A$$

(C_{sec}(i,x) (Ci/m^3); FracNoMix; C_{sec}(i,x) if no mixing (Ci/m^3); FracNoMix; C_{sec}(i,x) if mixing (Ci/m^3))

Final Weighted Air Concentration of Ra-226

$$8.52E\text{-}17 = 5.68E\text{-}15 \times 3.00E\text{-}01 \times 8.00E\text{-}01 \times 6.25E\text{-}02$$

(C_{sec}(i,x) (Ci/m^3); C_{sec}(i,x) (Ci/m^3); Fraction Particulate Size; P_{Ai} (unitless)); Frequency wind blowing in direction

N/A = Not applicable.

Figure 3-5 Hand Calculation of Ra-226 Concentration in 7.7 μm Particulates at the N Receptor Location in Case 3a (Momentum-Driven Plume) at Time Step 1

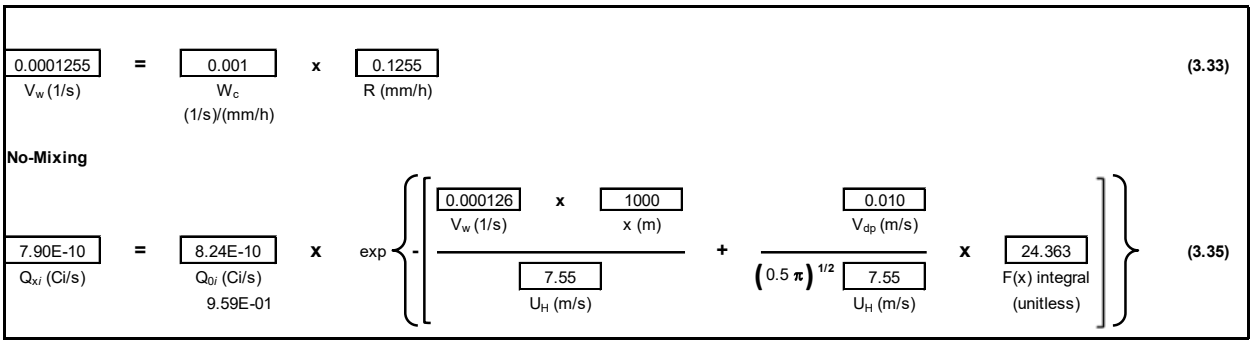

Figure 3-6 Hand Calculation of the Ra-226 Depleted Source Strength in 7.7 μm Particulates at the N Receptor Location in Case 3a (Momentum-Driven Plume) at Time Step 1

Table 3-1 provides a comparison of results for both particulate sizes for all 16 receptors considered in the Case 3a file against those results using the verification spreadsheet.

Table 3-1 Comparison of MILDOS Direct Downwind Air Concentrations of Ra-226 during Time Step 1 with the Verification Spreadsheet for Case 3a

Wind Blowing		Wind Speed Category/	Stability		Case 3a (Ci/m^3)		Verification (Ci/m^3)	
From:	To:	Speed (m/s)	Category	Receptor Name	7.7 μm	54 μm	7.7 μm	54 μm
N	S	1 (0.67)	A	S Receptor	5.88E-17	8.73E-18	5.88E-17	8.71E-18
NNE	SSW	2 (2.46)	A	SSW Receptor	1.96E-17	2.16E-17	1.96E-17	2.17E-17
NE	SW	2 (2.46)	B	SW Receptor	7.70E-17	4.99E-17	7.69E-17	5.00E-17
ENE	WSW	3 (4.47)	B	WSW Receptor	4.48E-17	5.32E-17	4.48E-17	5.33E-17
E	W	4 (6.93)	B	W Receptor	2.97E-17	4.57E-17	2.96E-17	4.57E-17
ESE	WNW	3 (4.47)	C	WNW Receptor	7.61E-17	7.33E-17	7.61E-17	7.27E-17
SE	NW	5 (9.61)	C	NW Receptor	3.74E-17	6.16E-17	3.74E-17	6.13E-17
SSE	NNW	6 (12.5)	C	NNW Receptor	2.90E-17	5.30E-17	2.91E-17	5.28E-17
S	N	4 (6.93)	D	N Receptor	8.53E-17	1.00E-16	8.52E-17	1.01E-16
SSW	NNE	5 (9.61)	D	NNE Receptor	6.34E-17	9.81E-17	6.33E-17	9.83E-17
SW	NE	6 (12.5)	D	NE Receptor	4.96E-17	8.97E-17	4.96E-17	8.98E-17
WSW	ENE	2 (2.46)	E	ENE Receptor	2.10E-16	1.87E-17	2.10E-16	1.86E-17
W	E	3 (4.47)	E	E Receptor	1.38E-16	7.88E-17	1.38E-16	7.87E-17
WNW	ESE	4 (6.93)	E	ESE Receptor	9.66E-17	1.19E-16	9.63E-17	1.18E-16
NW	SE	1 (0.67)	F	SE Receptor	1.45E-16	5.80E-22	1.46E-16	5.68E-22
NNW	SSE	2 (2.46)	F	SSE Receptor	1.62E-16	5.00E-18	1.61E-16	4.87E-18
				Total	1.32E-15	8.76E-16		

Plume reflection not considered if

$$\sigma_z(x) <= \frac{\left(1 - \underset{H\ (m)}{\boxed{0.00}} \Big/ \underset{L\ (m)}{\boxed{1000}}\right)^{1/2}}{1.2} \times \underset{L\ (m)}{\boxed{1000}} = \underset{\sigma_{z,no\text{-}mix}\ (m)}{\boxed{833.3}} \quad \textbf{[TRUE]} \qquad (3.18)$$

Then

$$\underset{y_{sec}\ (m)}{\boxed{199}} = \underset{x\ (m)}{\boxed{1000.00}} \times \tan(11.25^{o}) \qquad (3.23)$$

$$\underset{\substack{C_{sec}(i,x)\ \text{if no mixing} \\ (Ci/m^3)}}{\boxed{2.88E\text{-}15}} = \frac{\underset{Q_{xi}\ (Ci/s)}{\boxed{3.14E\text{-}10}}}{(2\pi)^{1/2} \times \underset{\sigma_z\ (m)}{\boxed{31.5}} \times \underset{U_H\ (m/s)}{\boxed{6.93}} \times \underset{y_{sec}\ (m)}{\boxed{198.91}}} \times \exp\left(\frac{-\underset{H^2\ (m^2)}{\boxed{0.00E+00}}}{2 \times \underset{\sigma_z^2\ (m^2)}{\boxed{9.94E+02}}}\right) \qquad (3.26)$$

Else a uniform distribution may be assumed if

$$0 <= \underset{H_{eff}\ (m)}{\boxed{0.00}} \Big/ \underset{L\ (m)}{\boxed{1000}} < 0.5 \quad \textbf{[TRUE]}$$

and

$$\sigma_z(x) >= \underset{L\ (m)}{\boxed{1000}} \times \left[-2.37 \times \underset{H_{eff}\ (m)}{\boxed{0.00}} \Big/ \underset{L\ (m)}{\boxed{1000}}\right)^2 + 0.489 \times \left(\underset{H_{eff}\ (m)}{\boxed{0.00}} \Big/ \underset{L\ (m)}{\boxed{1000}}\right) + 0.756\ ] = \underset{\sigma_{z,mix}\ (m)}{\boxed{756.0}} \quad \textbf{[FALSE]} \qquad (3.19)$$

OR

$$0.5 <= \underset{H_{eff}\ (m)}{\boxed{0.00}} \Big/ \underset{L\ (m)}{\boxed{1000}} < 1.0 \quad \textbf{[FALSE]}$$

and

$$\sigma_z(x) >= \underset{L\ (m)}{\boxed{1000}} \times \left[-2.37 \times \underset{H_{eff}\ (m)}{\boxed{0.00}} \Big/ \underset{L\ (m)}{\boxed{1000}}\right)^2 + 4.25 \times \left(\underset{H_{eff}\ (m)}{\boxed{0.00}} \Big/ \underset{L\ (m)}{\boxed{1000}}\right) - 1.13\ ] = \underset{\sigma_{z,mix}\ (m)}{\boxed{-1130.0}} \quad \textbf{[TRUE]} \qquad (3.20)$$

Then

$$\underset{\substack{C_{sec}(i,x)\ \text{if mixing} \\ (Ci/m^3)}}{\boxed{N/A}} = \frac{\underset{Q_{xi}\ (Ci/s)}{\boxed{7.90E\text{-}10}}}{2 \times \underset{y_{sec}\ (m)}{\boxed{198.91}} \times \underset{U_{eff}\ (m/s)}{\boxed{6.93}} \times \underset{L\ (m)}{\boxed{1000}}} \qquad (3.28)$$

Else a linear interpolation between 3.26 and 3.28 is used

The fraction of the non-mixing concentration is given by:

$$\underset{FracNoMix}{\boxed{1.000}} = \frac{\underset{\sigma_z\ (m)}{\boxed{31.5}} - \underset{\sigma_{z,no\text{-}mix}\ (m)}{\boxed{833.3}}}{\underset{\sigma_{z,mix}\ (m)}{\boxed{756.0}} - \underset{\sigma_{z,no\text{-}mix}\ (m)}{\boxed{833.3}}}$$

and the interpolated time-integrated ground-level air concentration is

$$\underset{\substack{C_{sec}(i,x) \\ (Ci/m^3)}}{\boxed{N/A}} = \underset{FracNoMix}{\boxed{1.0}} \times \underset{\substack{C_{sec}(i,x)\ \text{if no mixing} \\ (Ci/m^3)}}{\boxed{2.88E\text{-}15}} + \left(1 - \underset{FracNoMix}{\boxed{1.000}}\right) \times \underset{\substack{C_{sec}(i,x)\ \text{if mixing} \\ (Ci/m^3)}}{\boxed{N/A}}$$

Final Weighted Air Concentration of Ra-226

$$\underset{\substack{C_{sec}(i,x) \\ (Ci/m^3)}}{\boxed{1.01E\text{-}16}} = \underset{\substack{C_{sec}(i,x) \\ (Ci/m^3)}}{\boxed{2.88E\text{-}15}} \times \underset{\substack{\text{Fraction} \\ \text{Particulate Size}}}{\boxed{7.00E\text{-}01}} \times \underset{P_{Ai}\ (\text{unitless}))}{\boxed{8.00E\text{-}01}} \times \underset{\text{Frequency wind blowing in direction}}{\boxed{6.25E\text{-}02}}$$

N/A = Not applicable.

Figure 3-7 Hand Calculation of Ra-226 Concentration in 54 μm Particulates at the N Receptor Location in Case 3a (Momentum-Driven Plume) at Time Step 1

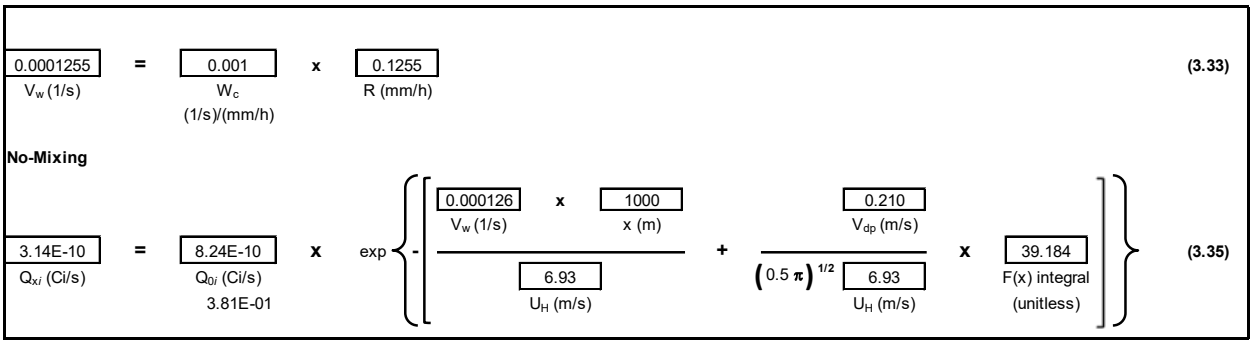

Figure 3-8 Hand Calculation of the Ra-226 Depleted Source Strength in 54 μm Particulates at the N Receptor Location in Case 3a (Momentum-Driven Plume) at Time Step 1

For the situation with a buoyancy-induced plume in Case 3c, the resulting direct air concentration of 7.84E-17 Ci/m^3 of Ra-226 in 7.7 μm particulates as shown in Figure 3-9 is in good agreement with the Case 3c results of 7.87E-17 Ci/m^3.

In most situations, multiple meteorological conditions will contribute to the downwind air concentration in a specific direction. Case 3b takes the 16 stability class/wind speed combinations and their frequency of occurrence used in Case 3a and assigns all to blow in the direction of the Far SSW Receptor. The Ra-226 downwind air concentration calculated for time step 1 (1.32E-15 Ci/m^3) exactly matches the sum of the contributions for all directions for both particulate sizes as shown in Table 3-1 for Case 3a.

3.2.2 Plume Reflection

For locations where the plume reaches the mixing height, Equation 3.28 is used to calculate the downwind air concentrations, and the depleted source strength due to dry deposition depends on the simple integral where $F(x) = 1/L$. The Far SSW Receptor in Case 3a is at such a location. For this direction, the meteorological data is set to a stability class of A and a wind speed of 2.46 m/s blowing from the NNE to the SSW. For the 7.7 μm particulates released, the direct downwind Ra-226 air concentration is calculated to be 4.31E-18 Ci/m^3 as presented in Figure 3-10. This value matches that calculated by the code for Case 3a. The corresponding calculations for effective wind speed and release height and the depleted source strength are shown in Figures 3-11 and 3-12, respectively.

As a check on the population calculations, Figures 3-13, 3-14, and 3-15 present the calculations for the effective release height of 7.7 μm particulates, the depleted source strength, and the downwind Ra-226 air concentration, respectively, at the 5–10 km WSW location in the population grid for Case 3a. The wind blows at 4.47 m/s in this direction from the ENE under stability class B. The calculated Ra-226 air concentration in 7.7 μm particulates is 7.29E-19 Ci/m^3 as shown in Figure 3-15, matching the output result for Case 3a.

Plume reflection not considered if

$$\sigma_z(x) <= \frac{(1 - 20.81/1000)^{1/2}}{1.2} \times 1000 = 824.6 \text{ [TRUE]} \quad (3.18)$$

(20.81 = H (m); 1000 = L (m); 1000 = L (m); 824.6 = $\sigma_{z,no\text{-}mix}$ (m))

Then

$$199 = 1000.00 \times \tan(11.25^{o}) \quad (3.23)$$

(y_{sec} (m); x (m))

$$5.22E\text{-}15 = \frac{7.91E\text{-}10}{(2\pi)^{1/2} \times 31.6 \times 7.74 \times 198.91} \times \exp\left(\frac{-4.33E+02}{2 \times 9.97E+02}\right) \quad (3.26)$$

(C_{sec}(i,x) if no mixing (Ci/m^3); Q_{xi} (Ci/s); σ_z (m); U_H (m/s); y_{sec} (m); H^2 (m^2); σ_z^2 (m^2))

Else a uniform distribution may be assumed if

$$0 <= 20.81/1000 < 0.5 \text{ [TRUE]}$$

(H_{eff} (m); L (m))

and

$$\sigma_z(x) >= 1000 \times [-2.37 \times (20.81/1000)^2 + 0.489 \times (20.81/1000) + 0.756] = 765.2 \text{ [FALSE]} \quad (3.19)$$

(L (m); H_{eff} (m); $\sigma_{z,mix}$ (m))

OR

$$0.5 <= 20.81/1000 < 1.0 \text{ [FALSE]}$$

(H_{eff} (m); L (m))

and

$$\sigma_z(x) >= 1000 \times [-2.37 \times (20.81/1000)^2 + 4.25 \times (20.81/1000) - 1.13] = -1042.6 \text{ [TRUE]} \quad (3.20)$$

(L (m); H_{eff} (m); $\sigma_{z,mix}$ (m))

Then

$$N/A = \frac{8.10E\text{-}10}{2 \times 198.91 \times 7.74 \times 1000} \quad (3.28)$$

(C_{sec}(i,x) if mixing (Ci/m^3); Q_{xi} (Ci/s); y_{sec} (m); U_{eff} (m/s); L (m))

Else a linear interpolation between 3.26 and 3.28 is used

The fraction of the non-mixing concentration is given by:

$$1.000 = \frac{31.6 - 824.6}{765.2 - 824.6}$$

(FracNoMix; σ_z (m); $\sigma_{z,no\text{-}mix}$ (m); $\sigma_{z,mix}$ (m); $\sigma_{z,no\text{-}mix}$ (m))

and the interpolated time-integrated ground-level air concentration is

$$N/A = 1.0 \times 5.22E\text{-}15 + (1 - 1.000) \times N/A$$

(C_{sec}(i,x) (Ci/m^3); FracNoMix; C_{sec}(i,x) if no mixing (Ci/m^3); FracNoMix; C_{sec}(i,x) if mixing (Ci/m^3))

Final Weighted Air Concentration of Ra-226

$$7.84E\text{-}17 = 5.22E\text{-}15 \times 3.00E\text{-}01 \times 8.00E\text{-}01 \times 6.25E\text{-}02$$

(C_{sec}(i,x) (Ci/m^3); C_{sec}(i,x) (Ci/m^3); Fraction Particulate Size; P_{Ai} (unitless)); Frequency wind blowing in direction

N/A = Not applicable.

Figure 3-9 Hand Calculation of Ra-226 Concentration in 7.7 μm Particulates at the N Receptor Location in Case 3c (Buoyancy-Induced Plume) at Time Step 1

Plume reflection not considered if

$$\sigma_z(x) \;<=\; \frac{(1 - 21.73/1500)^{1/2}}{1.2} \times 1500 = 1240.9 \text{ [FALSE]} \qquad (3.18)$$

(21.73 = H (m); 1500 = L (m); 1500 = L (m); 1240.9 = $\sigma_{z,no\text{-}mix}$ (m))

Then

$$338 = 1700.00 \times \tan(11.25^{o}) \qquad (3.23)$$

(338 = y_{sec} (m); 1700.00 = x (m))

$$\text{N/A} = \frac{7.35E\text{-}10}{(2\pi)^{1/2} \times 1386.0 \times 2.60 \times 338.15} \times \exp\left(\frac{-4.72E+02}{2 \times 1.92E+06}\right) \qquad (3.26)$$

(N/A = C_{sec}(i,x) if no mixing (Ci/m^3); 7.35E-10 = Q_{xi} (Ci/s); 1386.0 = σ_z (m); 2.60 = U_H (m/s); 338.15 = y_{sec} (m); -4.72E+02 = H^2 (m^2); 1.92E+06 = σ_z^2 (m^2))

Else a uniform distribution may be assumed if

$$0 <= 21.73/1500 < 0.5 \text{ [TRUE]}$$

(21.73 = H_{eff} (m); 1500 = L (m))

and

$$\sigma_z(x) >= 1500 \times [-2.37 \times (21.73/1500)^2 + 0.489 \times (21.73/1500) + 0.756] = 1143.9 \text{ [TRUE]} \qquad (3.19)$$

(1500 = L (m); 21.73 = H_{eff} (m); 1500 = L (m); 21.73 = H_{eff} (m); 1500 = L (m); 1143.9 = $\sigma_{z,mix}$ (m))

OR

$$0.5 <= 21.73/1500 < 1.0 \text{ [FALSE]}$$

(21.73 = H_{eff} (m); 1500 = L (m))

and

$$\sigma_z(x) >= 1500 \times [-2.37 \times (21.73/1500)^2 + 4.25 \times (21.73/1500) - 1.13] = -1603.4 \text{ [TRUE]} \qquad (3.20)$$

(1500 = L (m); 21.73 = H_{eff} (m); 1500 = L (m); 21.73 = H_{eff} (m); 1500 = L (m); -1603.4 = $\sigma_{z,mix}$ (m))

Then

$$2.87E\text{-}16 = \frac{7.56E\text{-}10}{2 \times 338.15 \times 2.60 \times 1500} \qquad (3.28)$$

(2.87E-16 = C_{sec}(i,x) if mixing (Ci/m^3); 7.56E-10 = Q_{xi} (Ci/s); 338.15 = y_{sec} (m); 2.60 = U_{eff} (m/s); 1500 = L (m))

Else a linear interpolation between 3.26 and 3.28 is used

The fraction of the non-mixing concentration is given by:

$$0.000 = \frac{1386.0 - 1240.9}{1143.9 - 1240.9}$$

(0.000 = FracNoMix; 1386.0 = σ_z (m); 1240.9 = $\sigma_{z,no\text{-}mix}$ (m); 1143.9 = $\sigma_{z,mix}$ (m); 1240.9 = $\sigma_{z,no\text{-}mix}$ (m))

and the interpolated time-integrated ground-level air concentration is

$$\text{N/A} = 0.0 \times \text{N/A} + (1 - 0.000) \times 2.87E\text{-}16$$

(N/A = C_{sec}(i,x) (Ci/m^3); 0.0 = FracNoMix; N/A = C_{sec}(i,x) if no mixing (Ci/m^3); 0.000 = FracNoMix; 2.87E-16 = C_{sec}(i,x) if mixing (Ci/m^3))

Final Weighted Air Concentration of Ra-226

$$4.31E\text{-}18 = 2.87E\text{-}16 \times 3.00E\text{-}01 \times 8.00E\text{-}01 \times 6.25E\text{-}02$$

(4.31E-18 = C_{sec}(i,x) (Ci/m^3); 2.87E-16 = C_{sec}(i,x) (Ci/m^3); 3.00E-01 = Fraction Particulate Size; 8.00E-01 = P_{Ai} (unitless)); 6.25E-02 = Frequency wind blowing in direction)

N/A = Not applicable.

Figure 3-10 Hand Calculation of Ra-226 Concentration in 7.7 μm Particulates at the Far SSW Receptor Location in Case 3a at Time Step 1

Effective Release Height

$$H = \max\left(h + \Delta h - h_v,\ 0\right) - \left(1 - P_c\right) \times \min\left(\max\left(h + \Delta h - h_v,\ 0\right),\ \max\left(0,\ E_r - E_p\right)\right) \quad (3.1)$$

H (m)	h (m)	Δh (m)	h_v (m)	P_c (unitless)	$h+\Delta h-h_v$	$E_r - E_p$
21.74	15.00	9.53	2.79	0.50	21.74	-11.00

Plume (Vertical) Settling

$$h_v = \frac{x \times V_s}{U_H} \quad (3.10)$$

h_v (m)	x (m)	V_s (m/s)	U_H (m/s)
2.79	1700	0.00427	2.60

$$V_s = 3 \times 10^{-5} \times d_p^{\,2} \times \rho_p \quad (3.11)$$

V_s (m/s)	d_p (μm)	ρ_p (g/cm^3)
0.004	7.70	2.40

Plume Rise

Momentum Driven Plume

$$\Delta h = 1.5 \times \frac{v_s \times d_s}{U_H} \quad (3.2)$$

Δh (m)	v_s (m/s)	d_s (m)	U_H (m/s)
9.53	11	1.5	2.60

Effective Wind Speed

If H <= 10 m

U_H (m/s)	U_a (m/s)
N/A	2.46

else

$$U_H = U_a \times \left[\frac{H}{z_a}\right]^{p} \quad (3.12)$$

U_H (m/s)	U_a (m/s)	H (m)	z_a (m)	p
2.60	2.46	21.74	10.00	0.07

N/A = Not applicable.

Figure 3-11 Hand Calculation of the Effective Wind Speed and Release Height for 7.7 μm Particulates at the Far SSW Receptor Location in Case 3a

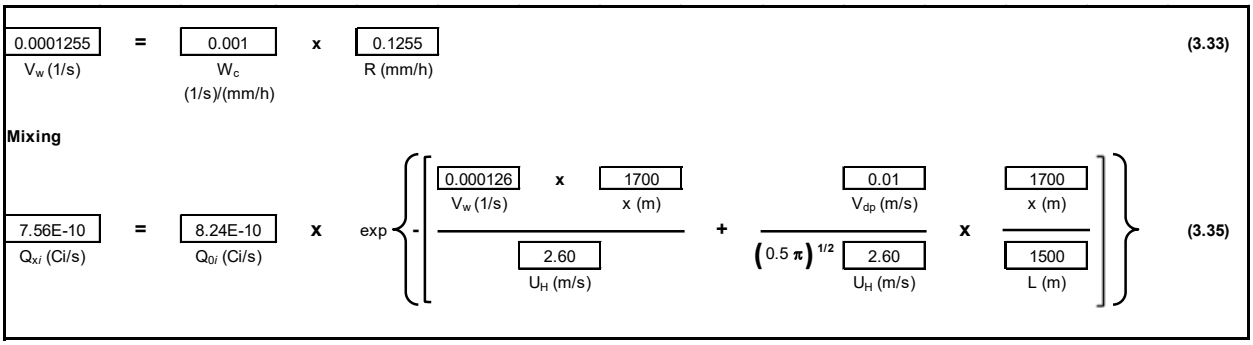

Figure 3-12 Hand Calculation of the Ra-226 Depleted Source Strength for 7.7 μm Particulates at the Far SSW Receptor Location in Case 3a at Time Step 1

Effective Release Height

13.41 (H (m)) = max (15.00 (h (m)) + 5.42 (Δh (m)) - 7.02 (h_v (m)), 0)

- (1 - 1.00 (P_c (unitless))) x min (max (13.41 ($h+\Delta h-h_v$), 0) , max (0 , -15.00 ($E_r - E_p$)) (m) **(3.1)**

Plume (Vertical) Settling

$$7.02\ (h_v\ (m)) = \frac{7500\ (x\ (m)) \times 0.00427\ (V_s\ (m/s))}{4.56\ (U_H\ (m/s))} \quad \textbf{(3.10)}$$

$$0.00427\ (V_s\ (m/s)) = 3 \times 10^{-5} \times 7.70^{2}\ (d_p\ (\mu m)) \times 2.40\ (\rho_p\ (g/cm^3)) \quad \textbf{(3.11)}$$

Plume Rise

Momentum Driven Plume

$$5.42\ (\Delta h\ (m)) = 1.5 \times \frac{11\ (v_s\ (m/s)) \times 1.5\ (d_s\ (m))}{4.56\ (U_H\ (m/s))} \quad \textbf{(3.2)}$$

Effective Wind Speed

If H <= 10 m

N/A (U_H (m/s)) = 4.47 (U_a (m/s))

else

$$4.56\ (U_H\ (m/s)) = 4.47\ (U_a\ (m/s)) \times \left[\frac{13.41\ (H\ (m))}{10.00\ (z_a\ (m))} \right]^{0.07\ (p)} \quad \textbf{(3.12)}$$

N/A = Not applicable.

Figure 3-13 Hand Calculation of the Effective Wind Speed and Release Height for 7.7 μm Particulates for the 5–10 km WSW Location on the Population Grid in Case 3a

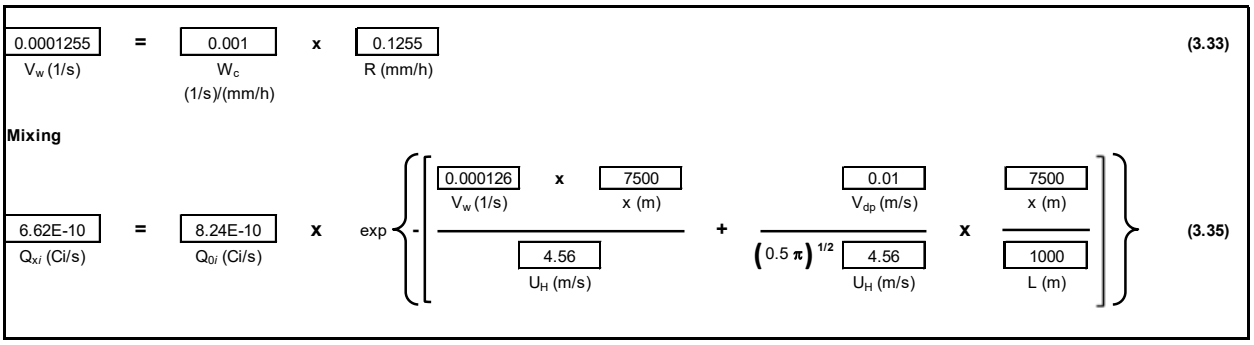

Figure 3-14 Hand Calculation of the Ra-226 Depleted Source Strength for 7.7 μm Particulates at the 5–10 km WSW Location on the Population Grid in Case 3a at Time Step 1

Plume reflection not considered if

$$\sigma_z(x) <= \frac{(1 - 13.41/1000)^{1/2}}{1.2} \times 1000 = 827.7 \text{ [FALSE]} \quad (3.18)$$

(13.41 = H (m); 1000 = L (m); 1000 = L (m); 827.7 = $\sigma_{z,no\text{-}mix}$ (m))

Then

$$y_{sec} = x \times \tan(11.25^o) \quad (3.23)$$

(1492 = y_{sec} (m); 7500.00 = x (m))

$$C_{sec}(i,x) \text{ if no mixing} = \frac{Q_{xi}}{(2\pi)^{1/2} \times \sigma_z \times U_H \times y_{sec}} \times \exp\left(\frac{-H^2}{2\sigma_z^2}\right) \quad (3.26)$$

(N/A = $C_{sec}(i,x)$ if no mixing (Ci/m^3); #N/A = Q_{xi} (Ci/s); 991.0 = σ_z (m); 4.56 = U_H (m/s); 1491.84 = y_{sec} (m); -1.80E+02 = H^2 (m^2); 9.82E+05 = σ_z^2 (m^2))

Else a uniform distribution may be assumed if

$0 <= H_{eff}/L < 0.5$ **[TRUE]** (13.41 = H_{eff} (m); 1000 = L (m))

and

$$\sigma_z(x) >= L \times [-2.37 \times (H_{eff}/L)^2 + 0.489 \times (H_{eff}/L) + 0.756] = \sigma_{z,mix} \text{ [TRUE]} \quad (3.19)$$

(1000 = L (m); 13.41 = H_{eff} (m); 1000 = L (m); 13.41 = H_{eff} (m); 1000 = L (m); 762.1 = $\sigma_{z,mix}$ (m))

OR

$0.5 <= H_{eff}/L < 1.0$ **[FALSE]** (13.41 = H_{eff} (m); 1000 = L (m))

and

$$\sigma_z(x) >= L \times [-2.37 \times (H_{eff}/L)^2 + 4.25 \times (H_{eff}/L) - 1.13] = \sigma_{z,mix} \text{ [TRUE]} \quad (3.20)$$

(1000 = L (m); 13.41 = H_{eff} (m); 1000 = L (m); 13.41 = H_{eff} (m); 1000 = L (m); -1073.4 = $\sigma_{z,mix}$ (m))

Then

$$C_{sec}(i,x) \text{ if mixing} = \frac{Q_{xi}}{2 \times y_{sec} \times U_{eff} \times L} \quad (3.28)$$

(4.86E-17 = $C_{sec}(i,x)$ if mixing (Ci/m^3); 6.62E-10 = Q_{xi} (Ci/s); 1491.84 = y_{sec} (m); 4.56 = U_{eff} (m/s); 1000 = L (m))

Else a linear interpolation between 3.26 and 3.28 is used

The fraction of the non-mixing concentration is given by:

$$\text{FracNoMix} = 0.000 = \frac{\sigma_z - \sigma_{z,no\text{-}mix}}{\sigma_{z,mix} - \sigma_{z,no\text{-}mix}}$$

(991.0 = σ_z (m); 827.7 = $\sigma_{z,no\text{-}mix}$ (m); 762.1 = $\sigma_{z,mix}$ (m); 827.7 = $\sigma_{z,no\text{-}mix}$ (m))

and the interpolated time-integrated ground-level air concentration is

$$C_{sec}(i,x) \text{ (Ci/m}^3\text{)} = \text{FracNoMix} \times C_{sec}(i,x) \text{ if no mixing (Ci/m}^3\text{)} + (1 - \text{FracNoMix}) \times C_{sec}(i,x) \text{ if mixing (Ci/m}^3\text{)}$$

(N/A; 0.0 = FracNoMix; N/A = $C_{sec}(i,x)$ if no mixing (Ci/m^3); 0.000 = FracNoMix; 4.86E-17 = $C_{sec}(i,x)$ if mixing (Ci/m^3))

Final Weighted Air Concentration of Ra-226

$$C_{sec}(i,x) \text{ (Ci/m}^3\text{)} = C_{sec}(i,x) \text{ (Ci/m}^3\text{)} \times \text{Fraction Particulate Size} \times P_{Ai} \text{ (unitless)} \times \text{Frequency wind blowing in direction}$$

(7.29E-19; 4.86E-17 = $C_{sec}(i,x)$ (Ci/m^3); 3.00E-01 = Fraction Particulate Size; 8.00E-01 = P_{Ai} (unitless)); 6.25E-02 = Frequency wind blowing in direction)

N/A = Not applicable.

Figure 3-15 Hand Calculation of Ra-226 Concentration in 7.7 μm Particulates at the 5–10 km WSW Location on the Population Grid in Case 3a at Time Step 1

4 ENVIRONMENTAL MEDIA CONCENTRATIONS

Section 3 covered the calculation of downwind air concentrations from a source. These air concentrations are used to estimate the resulting radionuclide ground concentrations, total air concentrations, and concentrations in vegetation, meat, and milk. Section 4.1 verifies the calculations performed by MILDOS to estimated radionuclide ground concentrations at receptor locations. Resuspension of radionuclides in particulates is examined in Section 4.2.1, and the resulting total air concentration calculation (direct downwind + resuspended) is verified in Section 4.2.2. The calculation of estimated vegetation concentrations is covered in Section 4.3. Meat and milk concentration calculations are examined in Section 4.4.

4.1 Radionuclide Ground Concentrations

The starting point in MILDOS for calculating particulate radionuclide ground concentrations is the value for the direct downwind radionuclide air concentration. For the Ore Pad source in the Case 1 example, a calculation of the direct air concentration for U-238 7.7 μm particulates is shown in Figure 4-1.

Direct Air Concentrations $C_{sec}(i,x,t_s)$ for U-238 particulates with 7.7 μm size from Ore Pad at Nearest Resident NNW

Time Step													
1	1.93E-17	=	3.91E-03	x	0.3	x	5.21E-07	x	3.17E-08	x	1
2	1.93E-17	=	3.91E-03	x	0.3	x	5.21E-07	x	3.17E-08	x	1
3	1.93E-17	=	3.91E-03	x	0.3	x	5.21E-07	x	3.17E-08	x	1
4	1.93E-18	=	3.91E-03	x	0.3	x	5.21E-07	x	3.17E-08	x	0.1
	$C_{sec}(i,x,t_s)$ (Ci/m^3)		Ci/yr Released from Ore Pad		7.7 μm Fraction		X/Q (s/m^3)		(yr/s)		P_{As} (unitless))

Figure 4-1 Hand Calculation of the Direct Air Concentration of U-238 in 7.7 μm Particulates from the Ore Pad at the Nearest Resident NNW Receptor Location in Case 1

The normalized air concentration (X/Q), which accounts for all weather conditions (stability class/wind speed combinations) and their frequency of occurrence for the direction toward the Nearest Resident NNW receptor from the Ore Pad, was taken from Case 1 results as a starting point for estimating the ground concentrations. As a check, the concentration values for the different time steps match Case 1 output if resuspension is not considered (resuspension deposition velocity was set to its minimum value of 1E-5 m/s).

The U-238 ground concentration from 7.7 μm particulates from the Ore Pad at the Nearest Resident NNW after time step 1 is 6.06E-12 Ci/m^2 as shown in the top of Figure 4-2, matching the value in the Case 1 results. This value depends on the direct air concentration just discussed, the deposition velocity (V_{dp}), the length of time step 1 (t_{s1}), and the decay of U-238 due to radioactive decay and environmental loss (λ_i and λ_e, respectively).

After each successive time step, the U-238 ground concentration not only depends on the amount freshly deposited during the time step (i.e., Equation 4.1), but also on the decay of U-238 remaining on the ground after the prior time step. For example, the ground concentration of U-238 from 7.7 μm particulates from the Ore Pad at the Nearest Resident NNW after time step 2 is 1.79E-11 Ci/m^2 as shown in the bottom of Figure 4-2, matching the corresponding value in the Case 1 results.

Ground Concentration after Time Step 1

$$\underset{\substack{C_g(i,p,x,t_1)\\(Ci/m^2)}}{6.06E\text{-}12} = \underset{V_{dp}\ (m/s)}{0.01} \times \underset{\substack{C_{sec}(i,x,t_{s1})\\(Ci/m^3)}}{1.93E\text{-}17} \times \frac{1 - \exp\left[-\left(\underset{\lambda\ (1/yr)}{1.39E\text{-}02} \times \underset{ts_1\ (yr)}{1.00}\right)\right]}{\underset{\lambda\ (1/yr)}{1.39E\text{-}02} \times \underset{(y/s)}{3.1689E\text{-}08}} \qquad (4.1)$$

where

$$\underset{\lambda\ (1/yr)}{1.39E\text{-}02} = \underset{\lambda_i\ (1/yr)}{1.55E\text{-}10} + \underset{\lambda_e\ (1/yr)}{1.39E\text{-}02}$$

for U-238

Ground Concentration after Time Step 2

$$\underset{\substack{C_g(i,p,x,t_2)\\(Ci/m^2)}}{1.79E\text{-}11} = \underset{V_{dp}\ (m/s)}{0.01} \times \underset{\substack{C_{sec}(i,x,t_{s2})\\(Ci/m^3)}}{1.93E\text{-}17} \times \frac{1 - \exp\left[-\left(\underset{\lambda\ (1/yr)}{1.39E\text{-}02} \times \underset{ts_2\ (yr)}{2.00}\right)\right]}{\underset{\lambda\ (1/yr)}{1.39E\text{-}02} \times \underset{(y/s)}{3.1689E\text{-}08}} + \underset{\substack{C_g(i,p,x,t_1)\\(Ci/m^2)}}{6.06E\text{-}12} \times \exp\left[-\left(\underset{\lambda\ (1/yr)}{1.39E\text{-}02} \times \underset{ts_2\ (yr)}{2.00}\right)\right] \qquad (4.2)$$

Figure 4-2 Hand Calculation of the Ground Concentration of U-238 in 7.7 μm Particulates from the Ore Pad at the Nearest Resident NNW Receptor Location in Case 1

The calculation for time step 4 is shown in Figure 4-3, with the amount deposited for each time step decayed for the length of time between the end of that time step and the end of time step 4. The estimated value of 2.97E-11 Ci/m^2 as shown in Figure 4-3 matches the corresponding value in the Case 1 results.

As a check on the calculations used in the population estimates, the direct air concentrations of U-238 in 7.7 μm particulates from the Ore Pad at the center of the population grid segment 10–20 km to the SSW were estimated as shown in Figure 4-4. These values were used to estimate the U-238 7.7 μm particulate ground concentration of 1.92E-13 Ci/m^2 as shown in Figure 4-5, which matches the corresponding value in the Case 1 results.

Deposition of radon progeny also results in radionuclide ground concentrations. As an example, Figure 4-6 presents the calculation of the Po-218 ground concentration after time step 1 in Case 3a at the 5–10 km WSW location of the population grid. The calculation of the Po-218 air concentration used is shown later in Figure 4-27. The calculated ground concentration of 3.81E-15 Ci/m^2 matches the Case 3a output result. Note that MILDOS assumes the ground concentrations of other Rn-222 progeny (Pb-214 and Bi-214) to be in equilibrium with the ground concentration of Po-218.

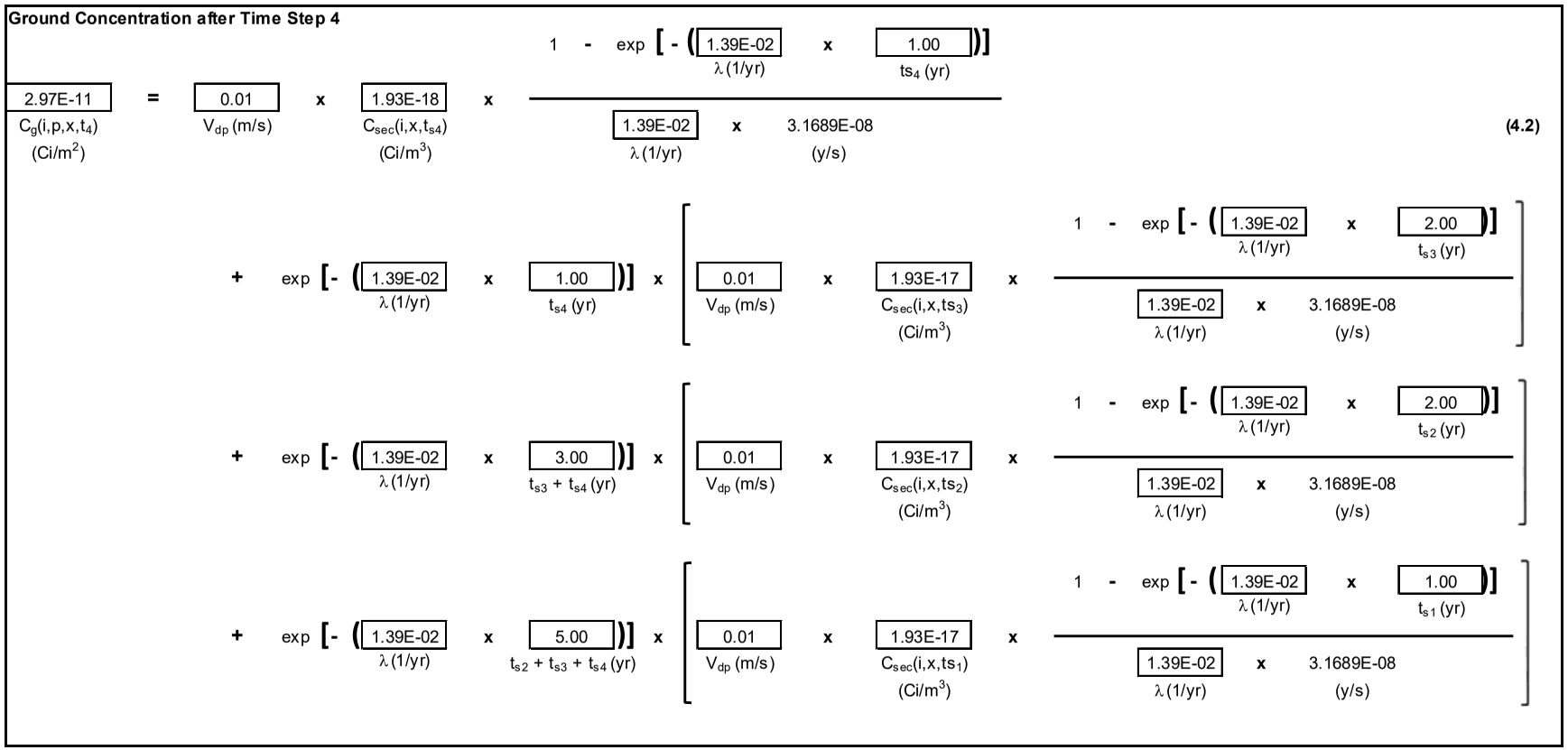

Figure 4-3 Hand Calculation of the Ground Concentration of U-238 in 7.7 μm Particulates from the Ore Pad at the Nearest Resident NNW Receptor Location after Time Step 4 in Case 1

Direct Air Concentrations $C_{sec}(i,x,t_s)$ for U-238 particulates with 7.7 μm size from Ore Pad at 10 - 20 km SSW on Population Grid

Time Step	$C_{sec}(i,x,t_s)$ (Ci/m^3)	=	Ci/yr Released from Ore Pad	x	7.7 μm Fraction	x	X/Q (s/m^3)	x	(yr/s)	x	P_{As} (unitless))
1	1.25E-19	=	3.91E-03	x	0.3	x	3.37E-09	x	3.17E-08	x	1
2	1.25E-19	=	3.91E-03	x	0.3	x	3.37E-09	x	3.17E-08	x	1
3	1.25E-19	=	3.91E-03	x	0.3	x	3.37E-09	x	3.17E-08	x	1
4	1.25E-20	=	3.91E-03	x	0.3	x	3.37E-09	x	3.17E-08	x	0.1

Figure 4-4 Hand Calculation of the Direct Air Concentration of U-238 in 7.7 μm Particulates from the Ore Pad at 10–20 km SSW on the Population Grid in Case 1

4.2 Radionuclide Air Concentrations

The total air concentration for a radionuclide in MILDOS is used to evaluate inhalation and external cloudshine exposure. The total air concentration is the sum of the downwind direct air concentration calculated using the dispersion model as discussed in Section 3 and the resuspended air concentration from previously deposited material at the receptor location in earlier time steps. Section 4.2.1 verifies the calculation of resuspended particulate air concentrations. Section 4.2.2 examines the total air concentration for particulates (the sum of direct and resuspended air concentrations) and the concentrations of Rn-222 and Rn-220 and their daughter products.

4.2.1 Resuspension

Particulate material from a source deposited at a receptor location has the potential for being resuspended by mechanical means such as wind or human activities. In the resuspension model used in MILDOS, calculation of the resuspended air concentration as presented in Figure 4-7 depends on the resuspension half-life in the form of the resuspension decay factor (λ_r), the initial and final values for the resuspension factor (R_I and R_F, respectively), and the deposition velocity for the reference particle size corresponding to R_I and R_F (V_{dr}).

The calculation of the resuspended air concentration of U-238 in 7.7 μm particulates from the Ore Pad at the Nearest Resident NNW receptor location after time step 4 in Case 1 is shown in Figure 4-7. Figure 4-8 presents the same calculation for the 10–20 km SSW location on the population grid. The estimated values of 1.29E-18 Ci/m^3 and 8.37E-21 Ci/m^3 will be used in the following section discussing total air concentrations.

4.2.2 Total Air Concentrations

4.2.2.1 Particulates

The total air concentration for U-238 in 7.7 μm particulates is the sum of the direct air concentration from the source (see Figures 4-1 and 4-4) and the concentration of resuspended material from anything previously deposited (see Figures 4-7 and 4-8). As shown in Figure 4-9, the total value for U-238 in 7.7 μm particulates from the Ore Pad at the Nearest Resident NNW receptor location after time step 4 in Case 1 is 3.23E-18 Ci/m^3, which matches the value found in the Case 1 interactive results. For the 10–20 km SSW location on the population grid, the total air concentration is 2.09E-20 Ci/m^3, which also matches the Case 1 results.

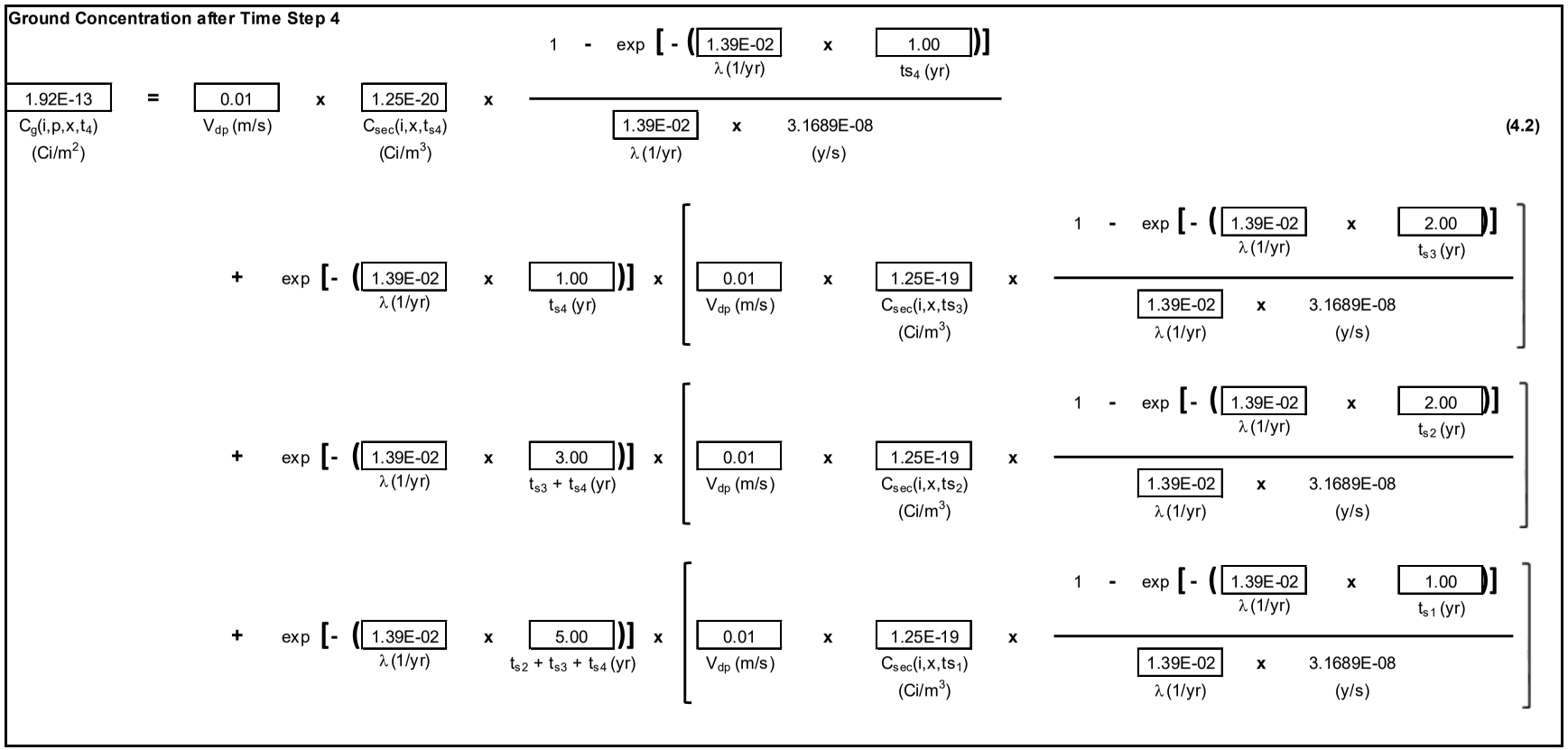

Figure 4-5 Hand Calculation of the Ground Concentration of U-238 in 7.7 μm Particulates from the Ore Pad at 10–20 km SSW on the Population Grid after Time Step 4 in Case 1

Ground Concentration after Time Step 1 for Rn-222 daughters Po-218, Pb-214, and Bi-214

$$\underset{C_g(i,p,x,t_1)\ (Ci/m^2)}{3.81E\text{-}15} = \underset{V_{dp}\ (m/s)}{0.003} \times \underset{C_{sec}(i,x,t_{s1})\ (Ci/m^3)}{4.72E\text{-}15} \times \frac{1 - \exp\left(-\underset{\lambda\ (1/yr)}{1.17E+05} \times \underset{ts_1\ (yr)}{1.00}\right)}{\underset{\lambda\ (1/yr)}{1.17E+05} \times \underset{(y/s)}{3.1689E\text{-}08}} \qquad \textbf{(4.1)}$$

where

$$\underset{\lambda\ (1/yr)\ \text{for Po-218}}{1.17E+05} = \underset{\lambda_i\ (1/yr)}{1.17E+05} + \underset{\lambda_e\ (1/yr)}{1.39E\text{-}02}$$

Figure 4-6 Hand Calculation of the Ground Concentration of Po-218 from Rn-222 Decay at 5–10 km WSW Location on the Population Grid after Time Step 1 in Case 3a

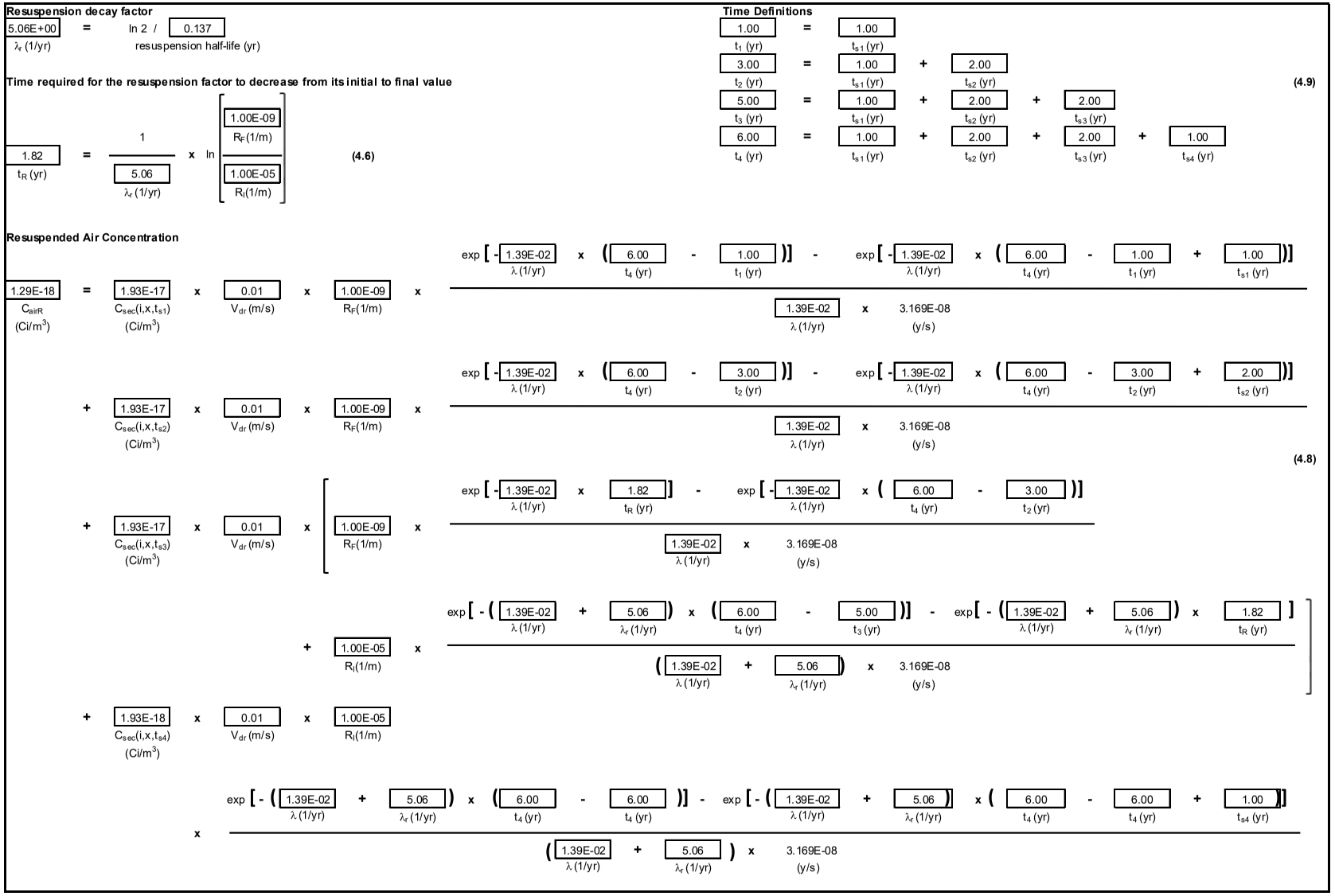

Figure 4-7 Hand Calculation of the Resuspended Air Concentration of U-238 in 7.7 μm Particulates from the Ore Pad at the Nearest Resident NNW Receptor Location after Time Step 4 in Case 1

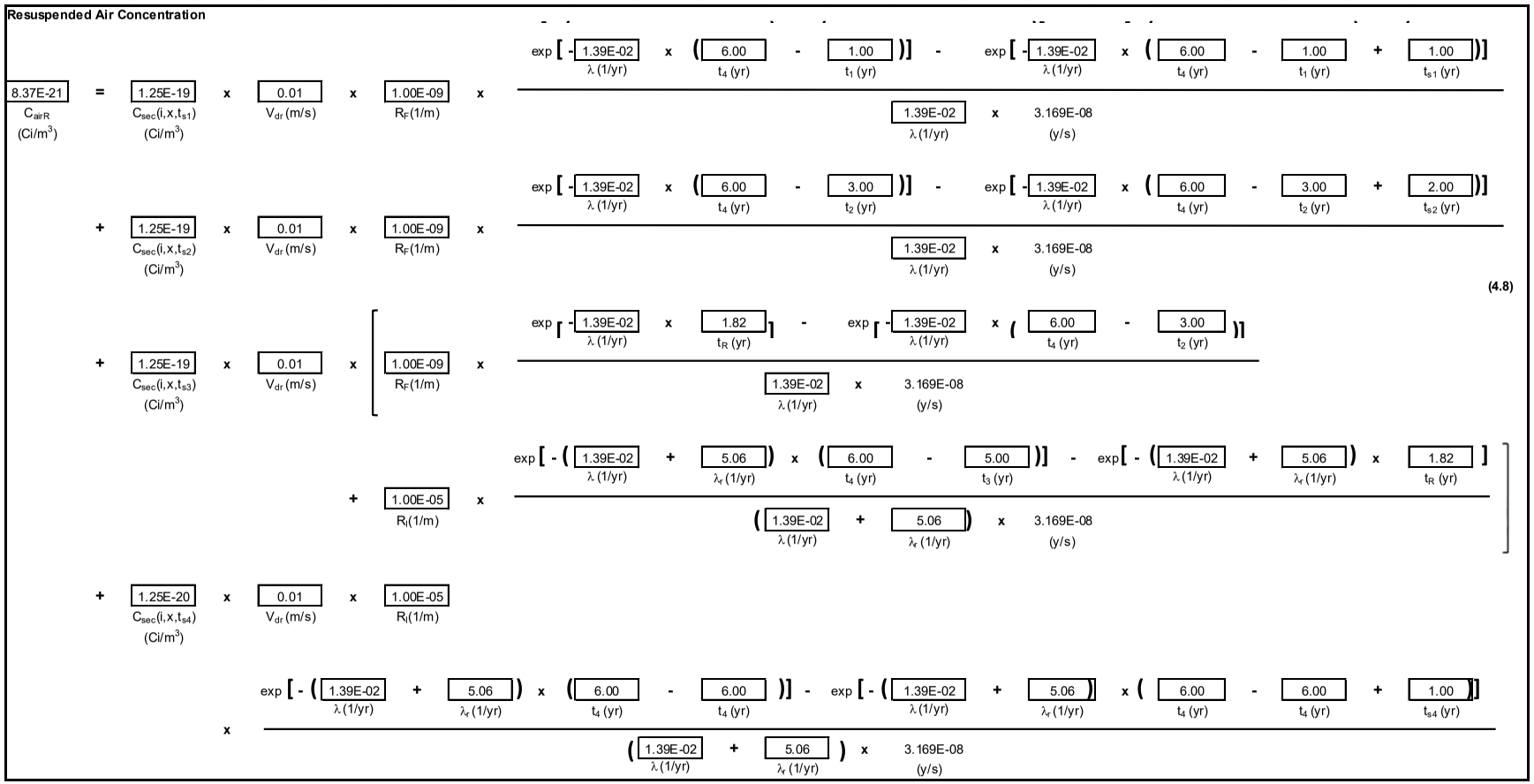

Figure 4-8 Hand Calculation of the Resuspended Air Concentration of U-238 in 7.7 μm Particulates from the Ore Pad at 10–20 km SSW on the Population Grid after Time Step 4 in Case 1

Total Air Concentration of U-238 in 7.7 μm Particulates at Nearest Resident NNW

3.23E-18	=	1.93E-18	+	1.29E-18	(4.10)
$C_{air}(i,p,x,t_j)$ (Ci/m^3)		$C_{sec}(i,p,x,t_j)$ (Ci/m^3)		$C_{airR}(i,p,x,t_j)$ (Ci/m^3)	

Total Air Concentration of U-238 in 7.7 μm Particulates at 10 - 20 km SSW on the Population Grid

2.09E-20	=	1.25E-20	+	8.37E-21	(4.10)
$C_{air}(i,p,x,t_j)$ (Ci/m^3)		$C_{sec}(i,p,x,t_j)$ (Ci/m^3)		$C_{airR}(i,p,x,t_j)$ (Ci/m^3)	

Figure 4-9 Hand Calculation of the Total Air Concentration of U-238 in 7.7 μm Particulates from the Ore Pad at the Nearest Resident NNW Receptor Location and the 10–20 km SSW Location on the Population Grid after Time Step 4 in Case 1

The calculations for the total air concentrations over all particulate sizes for U-238 for the Nearest Resident NNW and the 10–20 km SSW location on the population grid are presented in Figure 4-10. The summation of the individual particulate air concentrations matches the values found using the interactive results for Case 1.

Total Air Concentration of U-238 at Nearest Resident NNW

3.57E-18	=	3.23E-18	+	3.41E-19	(4.11)
$C_{air}(i,x,t_j)$ (Ci/m^3)		$C_{air}(i,p_1,x,t_j)$ (Ci/m^3)		$C_{air}(i,p_2,x,t_j)$ (Ci/m^3)	

Total Air Concentration of U-238 at 10 - 20 km SSW on the Population Grid

2.24E-20	=	2.09E-20	+	1.56E-21	(4.11)
$C_{air}(i,x,t_j)$ (Ci/m^3)		$C_{air}(i,p_1,x,t_j)$ (Ci/m^3)		$C_{air}(i,p_2,x,t_j)$ (Ci/m^3)	

Figure 4-10 Hand Calculation of the Total Air Concentration of U-238 from the Ore Pad at the Nearest Resident NNW Receptor Location and the 10–20 km SSW Location on the Population Grid after Time Step 4 in Case 1

4.2.2.2 Radon

MILDOS considers the radioactive decay of radon during air transport because of its short half-life. As a non-depositing gas, resuspension does not contribute to radon air concentrations. Figure 4-11 shows the calculations for the effective release height (18.26 m) and effective wind speed (7.59 m/s) for a gas released from the point source in Case 3a with a momentum-driven plume at the source. The effective wind speed is then used to calculate the transit time between the source and the receptor (τ = 1,000 m/7.59 m/s = 132 s) for the stability class – wind speed category combination used for the N Receptor location.

The transit time is used in turn to calculate the downwind source strength from radon radioactive decay based on the original release rate as shown in Figure 4-12. In combination with the weighted normalized air concentration value of 4.43E-7 s/m^3 estimated (which matches the Case 3a results), the downwind air concentration of Rn-220 is calculated to be 3.26E-15 Ci/m^3, matching the Case 3a results.

Effective Release Height

18.26 H (m) = max (15.00 h (m) + 3.26 Δh (m) - 0.00 h_v (m), 0)

- (1 - 0.50 P_c (unitless)) x min (max (18.26 $h+\Delta h-h_v$, 0) , max (0 , -11.00 $E_r - E_p$) (m) **(3.1)**

Plume (Vertical) Settling

$$0.00\ h_v\ (m) = \frac{1000\ x\ (m) \times 0.00000\ V_s\ (m/s)}{7.58\ U_H\ (m/s)} \quad \textbf{(3.10)}$$

$$0.00000\ V_s\ (m/s) = 3 \times 10^{-5} \times 0.00^2\ d_p\ (\mu m) \times 0.00\ \rho_p\ (g/cm^3) \quad \textbf{(3.11)}$$

Plume Rise

Momentum Driven Plume

$$3.26\ \Delta h\ (m) = 1.5 \times \frac{11\ v_s\ (m/s) \times 1.5\ d_s\ (m)}{7.58\ U_H\ (m/s)} \quad \textbf{(3.2)}$$

Effective Wind Speed

If H <= 10 m

N/A U_H (m/s) = 6.93 U_a (m/s)

else

$$7.58\ U_H\ (m/s) = 6.93\ U_a\ (m/s) \times \left[\frac{18.26\ H\ (m)}{10.00\ z_a\ (m)}\right]^{0.15\ p} \quad \textbf{(3.12)}$$

Figure 4-11 Hand Calculation of the Effective Release Height and Effective Wind Speed for a Gas at the N Receptor Location in Case 3a

The downwind concentration of Rn-222 is calculated using the same process. For Case 3a, the air concentration of Rn-222 at the N Receptor location is estimated to be 4.72E-13 Ci/m^3 as shown in Figure 4-13, the same value found in the Case 3a results.

Release Rate of Rn-220 from the Point Source for Time Step 1 in Case 3a

1.2	=	1.5	x	0.8
Q_{0_Rn} (Ci/yr)		Annural release of Rn-220 (Ci/yr)		Radon Adjustment Factor for Time Step 1

Downwind Source Strength of Rn-220 at the N Receptor Location for Time Step 1 in Case 3a

$$\underset{Q_{x\_Rn}\ (Ci/s)}{7.35E\text{-}09} = \underset{(yr/s)}{3.17E\text{-}08} \times \underset{Q_{0\_Rn}\ (Ci)}{1.2} \times \exp\left[-\underset{\lambda_{Rn}\ (1/yr)}{393418} \times \underset{\tau\ (s)}{132} \times \underset{(yr/s)}{3.17E\text{-}08}\right] \quad (4.12)$$

χ/Q for Downwind Gas Concentrations at 1,000 m for the D stability - 6.93 m/s Wind Speed Category Combination (rearrangement of Equation 3.26)

$$\frac{C_{sec}(i,x)\ \text{if no mixing}\ (Ci/m^3)}{Q_{xi}\ (Ci/s)} = \underset{\chi/Q\ (gas)\ (s/m^3)}{7.09E\text{-}06} = \frac{1}{(2\pi)^{1/2} \times \underset{\sigma_z\ (m)}{31.5} \times \underset{U_H\ (m/s)}{7.58} \times \underset{y_{sec}\ (m)}{198.9}} \times \exp\left[\frac{-\underset{H^2\ (m^2)}{333.5}}{2 \times \underset{\sigma_z^2\ (m^2)}{994.2}}\right]$$

Frequency weighted χ/Q (as reported by MILDOS)

4.43E-07	=	7.09E-06	x	0.0625
χ/Q (s/m^3)		χ/Q (gas) (s/m^3)		Met Data Frequency Wind Blowing Towards Receptor

Downwind Rn-220 Air Concentration at the N Receptor Location for Time Step 1 in Case 3a

3.26E-15	=	4.43E-07	x	7.35E-09	(4.13)
$C_{air}(Rn220,x,t_j)$ (Ci/m^3)		X/Q (s/m^3)		Q_{x_Rn} (Ci/s)	

Figure 4-12 Hand Calculation of the Rn-220 Air Concentration at the N Receptor Location for Time Step 1 in Case 3a

Release Rate of Rn-222 from the Point Source for Time Step 1 in Case 3a

33.6	=	42	x	0.8
Q_{0_Rn} (Ci/yr)		Annural release of Rn-222 (Ci/yr)		Radon Adjustment Factor for Time Step 1

Downwind Source Strength of Rn-222 at the N Receptor Location for Time Step 1 in Case 3a

$$\underset{Q_{x\_Rn}\ (Ci/s)}{1.06E\text{-}06} = \underset{(yr/s)}{3.17E\text{-}08} \times \underset{Q_{0\_Rn}\ (Ci)}{33.6} \times \exp\left[-\underset{\lambda_{Rn}\ (1/yr)}{66} \times \underset{\tau\ (s)}{132} \times \underset{(yr/s)}{3.17E\text{-}08}\right] \quad (4.12)$$

Downwind Rn-222 Air Concentration at the N Receptor Location for Time Step 1 in Case 3a

4.72E-13	=	4.43E-07	x	1.06E-06	(4.13)
$C_{air}(Rn222,x,t_j)$ (Ci/m^3)		X/Q (s/m^3)		Q_{x_Rn} (Ci/s)	

Figure 4-13 Hand Calculation of the Rn-222 Air Concentration at the N Receptor Location for Time Step 1 in Case 3a

The downwind air concentrations of radon daughter products are calculated from the non-decayed downwind air concentration of the radon parent. Figure 4-14 presents the calculations for the air concentration of Rn-220 (non-decayed – 1.69E-14 Ci/m^3) and its Pb-212 daughter product. The value of 1.97E-17 Ci/m^3 at the N Receptor location at Time Step 1 in Case 3a matches the value in the Case 3a results. Note that when using the "Interactive Results" tab to view results in MILDOS, the radon progeny are considered as a "Gas" selection under the Particle Size option.

Non-decayed Rn-220 concentration for daughter nuclide calculation

$$\underset{C_{air}(Rn220,x,t_0)\ (Ci/m^3)}{1.69E\text{-}14} = \underset{(yr/s)}{3.17E\text{-}08} \times \underset{X/Q\ (s/m^3)}{4.43E\text{-}07} \times \underset{Q_{0\_Rn}\ (Ci/yr)}{1.2} \qquad (4.15)$$

Downwind Pb-212 air concentration

Let n = 3 for Rn-220 (daughter is Pb-212) [Rn-220 is n=1; n=2 is Po-216]

$$\underset{C_{sec}(i_n,x,t_j)\ (Ci/m^3)}{1.97E\text{-}17} = \underset{C_{air}(Rn,x,t_0)\ (Ci/m^3)}{1.69E\text{-}14} \times \underset{\lambda_2\ (1/yr)}{1.46E+08} \times \underset{\lambda_3\ (1/yr)}{5.71E+02} \times$$

(4.14)

$$\left[\frac{\exp\left[- \underset{\lambda_1\ (1/yr)}{3.93E+05} \times \underset{\tau\ (s)}{132} \times \underset{(yr/s)}{3.17E\text{-}08}\right]}{\left(\underset{\lambda_2\ (1/yr)}{1.46E+08} - \underset{\lambda_1\ (1/yr)}{3.93E+05}\right) \times \left(\underset{\lambda_3\ (1/yr)}{5.71E+02} - \underset{\lambda_1\ (1/yr)}{3.93E+05}\right)} + \right.$$

$$\frac{\exp\left[- \underset{\lambda_2\ (1/yr)}{1.46E+08} \times \underset{\tau\ (s)}{132} \times \underset{(yr/s)}{3.17E\text{-}08}\right]}{\left(\underset{\lambda_1\ (1/yr)}{3.93E+05} - \underset{\lambda_2\ (1/yr)}{1.46E+08}\right) \times \left(\underset{\lambda_3\ (1/yr)}{5.71E+02} - \underset{\lambda_2\ (1/yr)}{1.46E+08}\right)} +$$

$$\left. \frac{\exp\left[- \underset{\lambda_3\ (1/yr)}{5.71E+02} \times \underset{\tau\ (s)}{132} \times \underset{(yr/s)}{3.17E\text{-}08}\right]}{\left(\underset{\lambda_1\ (1/yr)}{3.93E+05} - \underset{\lambda_3\ (1/yr)}{5.71E+02}\right) \times \left(\underset{\lambda_2\ (1/yr)}{1.46E+08} - \underset{\lambda_3\ (1/yr)}{5.71E+02}\right)} \right]$$

Figure 4-14 Hand Calculation of the Air Concentration at the N Receptor Location for Time Step 1 in Case 3a for the Pb-212 Daughter Product of Rn-220

The calculation for the air concentration of the Pb-214 daughter of Rn-222 is presented in Figure 4-15. The value of 5.51E-15 Ci/m^3 matches the value found in the Case 3a results.

Non-decayed Rn-222 concentration for daughter nuclide calculation

$$\underset{C_{air}(Rn222,x,t_0)\ (Ci/m^3)}{4.72E\text{-}13} = \underset{(yr/s)}{3.17E\text{-}08} \times \underset{X/Q\ (s/m^3)}{4.43E\text{-}07} \times \underset{Q_{0\_Rn}\ (Ci/yr)}{33.6} \qquad (4.15)$$

Downwind Pb-214 air concentration

Let n = 3 for Rn-222 (daughter is Pb-214) [Rn-222 is n=1; n=2 is Po-218]

$$\underset{C_{sec}(i_n,x,t_j)\ (Ci/m^3)}{5.51E\text{-}15} = \underset{C_{air}(Rn,x,t_0)\ (Ci/m^3)}{4.72E\text{-}13} \times \underset{\lambda_2\ (1/yr)}{1.17E+05} \times \underset{\lambda_3\ (1/yr)}{1.36E+04} \times$$

(4.14)

$$\left[\frac{\exp\left[- \underset{\lambda_1\ (1/yr)}{6.62E+01} \times \underset{\tau\ (s)}{132} \times \underset{(yr/s)}{3.17E\text{-}08}\right]}{\left(\underset{\lambda_2\ (1/yr)}{1.17E+05} - \underset{\lambda_1\ (1/yr)}{6.62E+01}\right) \times \left(\underset{\lambda_3\ (1/yr)}{1.36E+04} - \underset{\lambda_1\ (1/yr)}{6.62E+01}\right)} + \right.$$

$$\frac{\exp\left[- \underset{\lambda_2\ (1/yr)}{1.17E+05} \times \underset{\tau\ (s)}{132} \times \underset{(yr/s)}{3.17E\text{-}08}\right]}{\left(\underset{\lambda_1\ (1/yr)}{6.62E+01} - \underset{\lambda_2\ (1/yr)}{1.17E+05}\right) \times \left(\underset{\lambda_3\ (1/yr)}{1.36E+04} - \underset{\lambda_2\ (1/yr)}{1.17E+05}\right)} +$$

$$\left. \frac{\exp\left[- \underset{\lambda_3\ (1/yr)}{1.36E+04} \times \underset{\tau\ (s)}{132} \times \underset{(yr/s)}{3.17E\text{-}08}\right]}{\left(\underset{\lambda_1\ (1/yr)}{6.62E+01} - \underset{\lambda_3\ (1/yr)}{1.36E+04}\right) \times \left(\underset{\lambda_2\ (1/yr)}{1.17E+05} - \underset{\lambda_3\ (1/yr)}{1.36E+04}\right)} \right]$$

Figure 4-15 Hand Calculation of the Air Concentration at the N Receptor Location for Time Step 1 in Case 3a for the Pb-214 Daughter Product of Rn-222

In the case of a buoyancy-induced plume rise (Case 3c), the same set of calculations were verified for the concentrations of Rn-220 and Rn-222 and their progeny, Pb-212 and Pb-214, respectively, as shown in Figures 4-16 to 4-21. All four concentrations matched the Case 3c output results.

Effective Release Height

21.34 (H (m)) = max (15.00 (h (m)) + 6.34 (Δh (m)) - 0.00 (h_v (m)), 0)

- (1 - 0.50 (P_c (unitless))) x min (max (21.34 ($h+\Delta h-h_v$), 0) , max (0 , -11.00 ($E_r - E_p$)) (m) **(3.1)**

Plume (Vertical) Settling

$$0.00\ (h_v\ (m)) = \frac{1000\ (x\ (m)) \times 0.00000\ (V_s\ (m/s))}{7.76\ (U_H\ (m/s))} \quad \textbf{(3.10)}$$

$$0.00000\ (V_s\ (m/s)) = 3 \times 10^{-5} \times 0.00\ (d_p\ (\mu m))^2 \times 0.00\ (\rho_p\ (g/cm^3)) \quad \textbf{(3.11)}$$

Plume Rise

Momentum Driven Plume

$$N/A\ (\Delta h\ (m)) = 1.5 \times \frac{11\ (v_s\ (m/s)) \times 1.5\ (d_s\ (m))}{7.76\ (U_H\ (m/s))} \quad \textbf{(3.2)}$$

Effective Wind Speed

If H <= 10 m

N/A (U_H (m/s)) = 6.93 (U_a (m/s))

else

$$7.76\ (U_H\ (m/s)) = 6.93\ (U_a\ (m/s)) \times \left[\frac{21.34\ (H\ (m))}{10.00\ (z_a\ (m))} \right]^{0.15\ (p)} \quad \textbf{(3.12)}$$

Figure 4-16 Hand Calculation of the Effective Buoyancy-Induced Plume Release Height and Effective Wind Speed for a Gas (including Radon) at the N Receptor Location in Case 3c

Buouancy Induced Plume
Unstable/Neutral Conditons (A-D)

x <= 10 x stack height

$$\underset{\Delta h\ (m)}{N/A} = \frac{1.6}{\underset{U_H\ (m/s)}{7.76}} \times [\ 3.7 \times 10^{-5}\ \underset{(m^4/cal\text{-}s^2)}{\times}\ \underset{Q_h\ (cal/s)}{35000} \times \underset{x^2\ (m^2)}{1000000}\ ]^{1/3} \quad (3.3)$$

x > 10 x stack height

$$\underset{\Delta h\ (m)}{6.34} = \frac{1.6}{\underset{U_H\ (m/s)}{7.76}} \times [\ 3.7 \times 10^{-5}\ \underset{(m^4/cal\text{-}s^2)}{\times}\ \underset{Q_h\ (cal/s)}{35000} \times 100 \times \underset{h^2\ (m^2)}{225.00}\ ]^{1/3} \quad (3.4)$$

Stable Conditions (E,F)

Still expanding [$x <= 2.4\ (U_H/s^{1/2})$ and $U >= U_{test}$]

$$\underset{\Delta h\ (m)}{N/A} = \frac{1.6}{\underset{U_H\ (m/s)}{7.76}} \times [\ 3.7 \times 10^{-5}\ \underset{(m^4/cal\text{-}s^2)}{\times}\ \underset{Q_h\ (cal/s)}{35000} \times \underset{x^2\ (m^2)}{1000000}\ ]^{1/3} \quad (3.5)$$

Far limit [$x > 2.4\ (U_H/s^{1/2})$ and $U >= U_{test}$]

$$\underset{\Delta h\ (m)}{N/A} = 2.9 \times \left[\frac{\underset{(m^4/cal\text{-}s^2)}{3.7 \times 10^{-5}} \times \underset{Q_h\ (cal/s)}{35000}}{\underset{U_H\ (m/s)}{7.76} \times \underset{s\ (s^{-2})}{0.001213}} \right]^{1/3} \quad (3.6)$$

Light wind, vertical rise ($U < U_{test}$)

$$\underset{\Delta h\ (m)}{N/A} = 5.0 \times \frac{[\ 3.7 \times 10^{-5} \times \underset{Q_h\ (cal/s)}{35000}\ ]^{1/4}}{[\ \underset{s\ (s^{-2})}{0.001213}\ ]^{3/8}} \quad (3.7)$$

s: stability parameter [$g/T * d\theta/dz$]

$$\underset{s\ (s^{-2})}{0.001213} = \frac{\underset{g\ (m/s^2)}{9.80665}}{\underset{T_a(^oK)}{283}} \times \underset{dT/dz + I\ (^oK/m)}{0.035} \quad (3.8)$$

wind speed cut-off

$$\underset{U_{test}\ (m/s)}{0.089862} = 0.195 \times [3.7 \times 10^{-5} \times \underset{Q_h\ (cal/s)}{35000}\ ]^{1/4} \times [\ \underset{s\ (s^{-2})}{0.001213}\ ]^{1/8} \quad (3.9)$$

Figure 4-17 Hand Calculation of the Buoyancy-Induced Plume Rise in Case 3c for Gases (including Radon) at the N Receptor Location

Release Rate of Rn-220 from the Point Source for Time Step 1 in Case 3c

1.2	=	1.5	x	0.8
Q_{0_Rn} (Ci/yr)		Annural release of Rn-220 (Ci/yr)		Radon Adjustment Factor for Time Step 1

Downwind Source Strength of Rn-220 at the N Receptor Location for Time Step 1 in Case 3c

$$\underset{Q_{x\_Rn}\ (Ci/s)}{7.63E\text{-}09} = \underset{(yr/s)}{3.17E\text{-}08} \times \underset{Q_{0\_Rn}\ (Ci)}{1.2} \times \exp\left[-\underset{\lambda_{Rn}\ (1/yr)}{393418} \times \underset{\tau\ (s)}{129} \times \underset{(yr/s)}{3.17E\text{-}08}\right] \quad (4.12)$$

χ/Q for Downwind Gas Concentrations at 1,000 m for the D stability - 6.93 m/s Wind Speed Category Combination (rearrangement of Equation 3.26)

$$\frac{C_{sec}(i,x)\ \text{if no mixing}\ (Ci/m^3)}{Q_{xi}\ (Ci/s)} = \underset{\chi/Q\ (gas)\ (s/m^3)}{6.51E\text{-}06} = \frac{1}{(2\pi)^{1/2} \times \underset{\sigma_z\ (m)}{31.6} \times \underset{U_H\ (m/s)}{7.76} \times \underset{y_{sec}\ (m)}{198.9}} \times \exp\left[\frac{-\underset{H^2\ (m^2)}{455.5}}{2 \times \underset{\sigma_z^2\ (m^2)}{996.6}}\right]$$

Frequency weighted χ/Q (as reported by MILDOS)

4.07E-07	=	6.51E-06	x	0.0625
χ/Q (s/m^3)		χ/Q (gas) (s/m^3)		Met Data Frequency Wind Blowing Towards Receptor

Downwind Rn-220 Air Concentration at the N Receptor Location for Time Step 1 in Case 3c

$$\underset{C_{air}(Rn220,x,t_j)\ (Ci/m^3)}{3.11E\text{-}15} = \underset{X/Q\ (s/m^3)}{4.07E\text{-}07} \times \underset{Q_{x\_Rn}\ (Ci/s)}{7.63E\text{-}09} \quad (4.13)$$

Figure 4-18 Hand Calculation of the Rn-220 Air Concentration at the N Receptor Location for Time Step 1 in Case 3c

Release Rate of Rn-222 from the Point Source for Time Step 1 in Case 3c

33.6	=	42	x	0.8
Q_{0_Rn} (Ci/yr)		Annural release of Rn-222 (Ci/yr)		Radon Adjustment Factor for Time Step 1

Downwind Source Strength of Rn-222 at the N Receptor Location for Time Step 1 in Case 3c

$$\underset{Q_{x\_Rn}\ (Ci/s)}{1.06E\text{-}06} = \underset{(yr/s)}{3.17E\text{-}08} \times \underset{Q_{0\_Rn}\ (Ci)}{33.6} \times \exp\left[-\underset{\lambda_{Rn}\ (1/yr)}{66} \times \underset{\tau\ (s)}{129} \times \underset{(yr/s)}{3.17E\text{-}08}\right] \quad (4.12)$$

Downwind Rn-222 Air Concentration at the N Receptor Location for Time Step 1 in Case 3c

$$\underset{C_{air}(Rn222,x,t_j)\ (Ci/m^3)}{4.33E\text{-}13} = \underset{X/Q\ (s/m^3)}{4.07E\text{-}07} \times \underset{Q_{x\_Rn}\ (Ci/s)}{1.06E\text{-}06} \quad (4.13)$$

Figure 4-19 Hand Calculation of the Rn-222 Air Concentration at the N Receptor Location for Time Step 1 in Case 3c

Non-decayed Rn-220 concentration for daughter nuclide calculation

$$C_{air}(Rn220,x,t_0)\ (Ci/m^3) = 3.17E\text{-}08\ (yr/s) \times 4.07E\text{-}07\ X/Q\ (s/m^3) \times 1.2\ Q_{0\_Rn}\ (Ci/yr) \quad (4.15)$$

Downwind Pb-212 air concentration

Let n = 3 for Rn-220 (daughter is Pb-212) [Rn-220 is n=1; n=2 is Po-216]

$$C_{sec}(i_n,x,t_j)\ (Ci/m^3) = C_{air}(Rn,x,t_0)\ (Ci/m^3) \times 1.46E+08\ \lambda_2\ (1/yr) \times 5.71E+02\ \lambda_3\ (1/yr) \times \quad (4.14)$$

$$\left[\frac{\exp\left[-\,3.93E+05\ \lambda_1\ (1/yr) \times 129\ \tau\ (s) \times 3.17E\text{-}08\ (yr/s)\right]}{(1.46E+08\ \lambda_2\ (1/yr) - 3.93E+05\ \lambda_1\ (1/yr)) \times (5.71E+02\ \lambda_3\ (1/yr) - 3.93E+05\ \lambda_1\ (1/yr))} + \right.$$

$$\frac{\exp\left[-\,1.46E+08\ \lambda_2\ (1/yr) \times 129\ \tau\ (s) \times 3.17E\text{-}08\ (yr/s)\right]}{(3.93E+05\ \lambda_1\ (1/yr) - 1.46E+08\ \lambda_2\ (1/yr)) \times (5.71E+02\ \lambda_3\ (1/yr) - 1.46E+08\ \lambda_2\ (1/yr))} +$$

$$\left. \frac{\exp\left[-\,5.71E+02\ \lambda_3\ (1/yr) \times 129\ \tau\ (s) \times 3.17E\text{-}08\ (yr/s)\right]}{(3.93E+05\ \lambda_1\ (1/yr) - 5.71E+02\ \lambda_3\ (1/yr)) \times (1.46E+08\ \lambda_2\ (1/yr) - 5.71E+02\ \lambda_3\ (1/yr))} \right]$$

Figure 4-20 Hand Calculation of the Air Concentration at the N Receptor Location for Time Step 1 in Case 3c for the Pb-212 Daughter Product of Rn-220

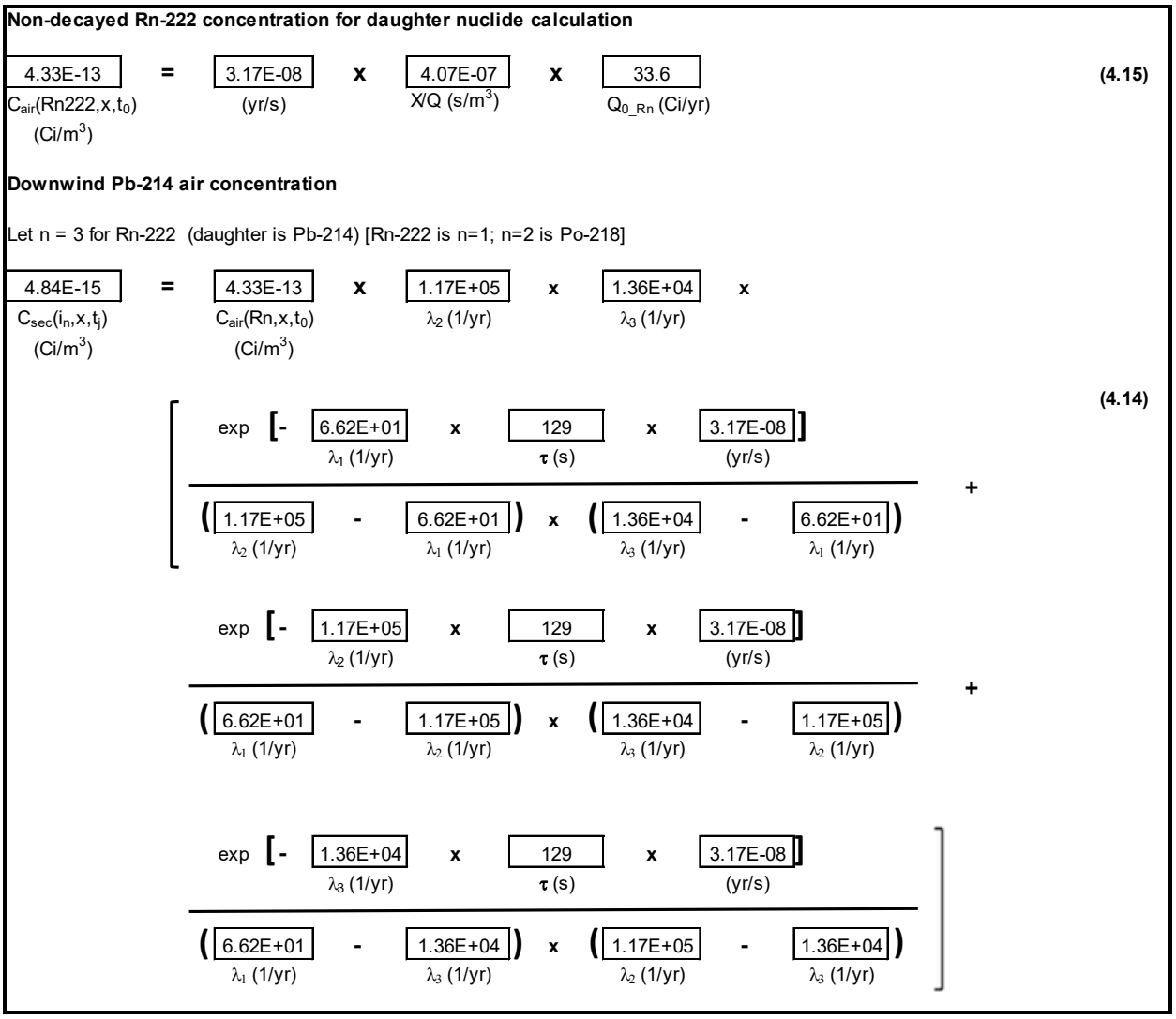

Figure 4-21 Hand Calculation of the Air Concentration at the N Receptor Location for Time Step 1 in Case 3c for the Pb-214 Daughter Product of Rn-222

As a check on population calculations for radon at farther distances in the air dispersion mixing zone, radon concentration estimates were verified for the 5–10 km WSW location on the population grid for Case 3a. Figure 4-22 shows the calculation for the effective release height and wind speed for Case 3a. Figures 4-23 and 4-24 present the calculations for the Rn-220 and Rn-222 air concentrations, respectively, for Case 3a. The concentrations are calculated for the 5–10 km WSW location on the population grid during time step 1. The Rn-220 concentration of 3.84E-25 Ci/m^3 is in good agreement with the Case 3a output result of 3.85E-25 Ci/m^3, and the Rn-222 concentration of 4.73×10^{-15} Ci/m^3 matches the Case 3a output result. Figures 4-25 and 4-26 present the air concentrations for the Pb-212 and Pb-214 daughters of Rn-220 and Rn-222, respectively. The concentration values of 2.39E-19 Ci/m^3 and 2.05E-15 Ci/m^3 for Pb-212 and Pb-214, respectively, match the Case 3a output results. The concentration of the first daughter product of Rn-222 (Po-218) was also estimated as shown in Figure 4-27 to be 4.72E-15 Ci/m^3, which matches the Case 3a output result.

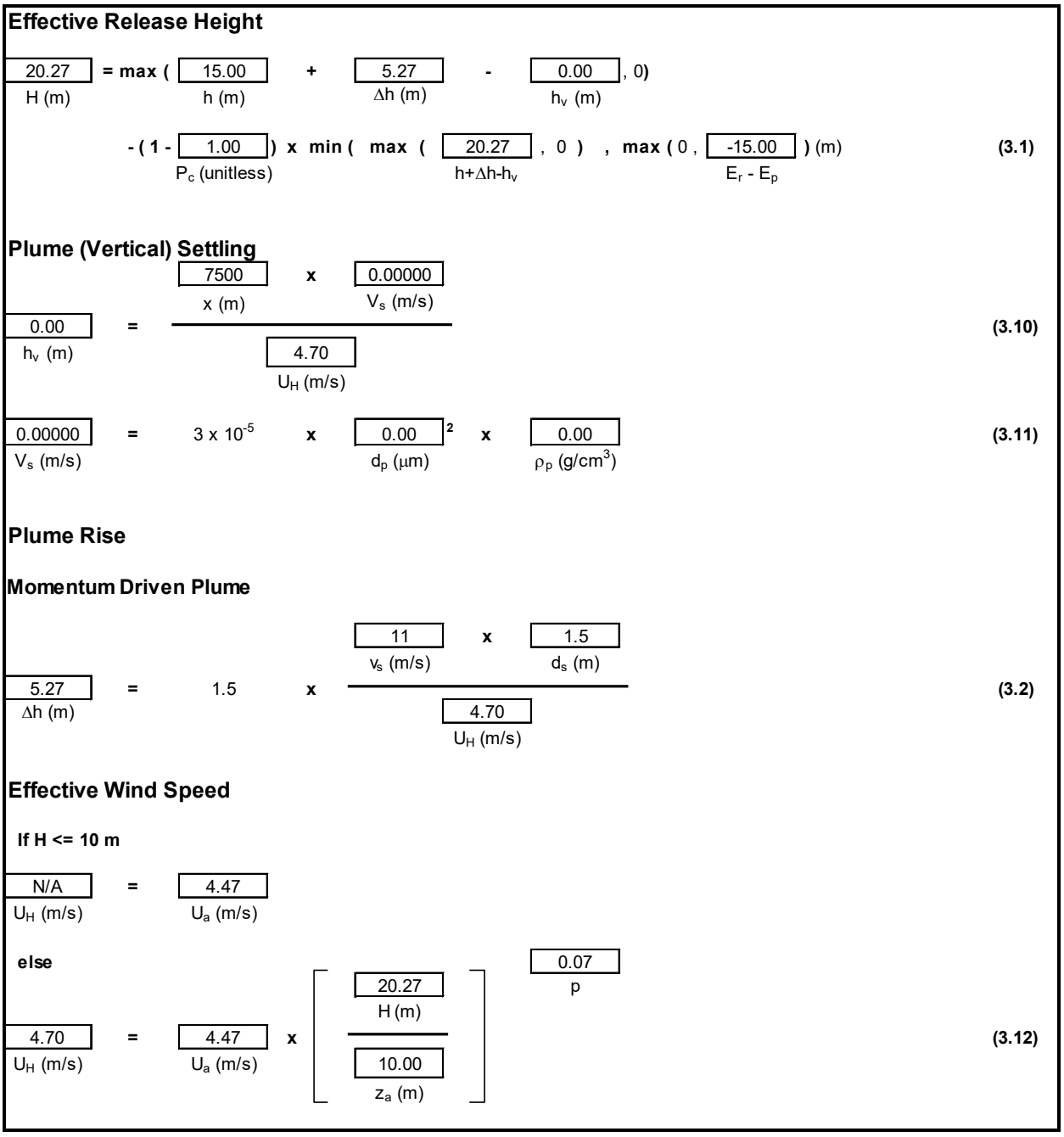

Figure 4-22 Hand Calculation of the Effective Momentum-Driven Plume Release Height and Effective Wind Speed for a Gas (including Radon) at the 5–10 km WSW Location on the Population Grid in Case 3a at Time Step 1

Release Rate of Rn-220 from the Point Source for Time Step 1 in Case 3a

1.2	=	1.5	x	0.8
Q_{0_Rn} (Ci/yr)		Annural release of Rn-220 (Ci/yr)		Radon Adjustment Factor for Time Step 1

Downwind Source Strength of Rn-220 at the 5 - 10 km WSW Location on the Population Grid for Time Step 1 in Case 3a

8.61E-17	=	3.17E-08	x	1.2	x	exp [-	393418	x	1597	x	3.17E-08	]	(4.12)
Q_{x_Rn} (Ci/s)		(yr/s)		Q_{0_Rn} (Ci)			λ_{Rn} (1/yr)		τ (s)		(yr/s)		

χ/Q for Downwind Gas Concentrations at 7,500 m for the B stability - 4.47 m/s Wind Speed Category Combination (rearrangement of Equation 3.28)

$C_{sec}(i,x)$ if no mixing

$$\frac{(Ci/m^3)}{Q_{x/}\ (Ci/s)} = \chi/Q\ (gas)\ (s/m^3) = \frac{1}{2 \times y_{sec}\ (m) \times U_H\ (m/s) \times L\ (m)}$$

7.14E-08		1491.8		4.70		1000

Frequency weighted χ/Q (as reported by MILDOS)

4.46E-09	=	7.14E-08	x	0.0625
χ/Q (s/m^3)		χ/Q (gas) (s/m^3)		Met Data Frequency Wind Blowing Towards Receptor

Downwind Rn-220 Air Concentration at the WSW 5 - 10 km Population Grid Location for Time Step 1 in Case 3a

3.84E-25	=	4.46E-09	x	8.61E-17	(4.13)
$C_{air}(Rn220,x,t_j)$ (Ci/m^3)		X/Q (s/m^3)		Q_{x_Rn} (Ci/s)	

Figure 4-23 Hand Calculation of the Rn-220 Air Concentration at the 5–10 km WSW Location on the Population Grid in Case 3a at Time Step 1

Release Rate of Rn-222 from the Point Source for Time Step 1 in Case 3a

33.6	=	42	x	0.8
Q_{0_Rn} (Ci/yr)		Annural release of Rn-222 (Ci/yr)		Radon Adjustment Factor for Time Step 1

Downwind Source Strength of Rn-222 at the 5 - 10 km WSW Location on the Population Grid for Time Step 1 in Case 3a

1.06E-06	=	3.17E-08	x	33.6	x	exp [-	66	x	1597	x	3.17E-08	]	(4.12)
Q_{x_Rn} (Ci/s)		(yr/s)		Q_{0_Rn} (Ci)			λ_{Rn} (1/yr)		τ (s)		(yr/s)		

Downwind Rn-222 Concentration at the 5 - 10 km WSW Location on the Population Grid for Time Step 1 in Case 3a

4.73E-15	=	4.46E-09	x	1.06E-06	(4.13)
$C_{air}(Rn222,x,t_j)$ (Ci/m^3)		X/Q (s/m^3)		Q_{x_Rn} (Ci/s)	

Figure 4-24 Hand Calculation of the Rn-222 Air Concentration at the 5–10 km WSW Location on the Population Grid in Case 3a at Time Step 1

Non-decayed Rn-220 concentration for daughter nuclide calculation

$$\underset{C_{air}(Rn220,x,t_0)\ (Ci/m^3)}{1.70E\text{-}16} = \underset{(yr/s)}{3.17E\text{-}08} \times \underset{X/Q\ (s/m^3)}{4.46E\text{-}09} \times \underset{Q_{0\_Rn}\ (Ci/yr)}{1.2} \qquad (4.15)$$

Downwind Pb-212 air concentration

Let n = 3 for Rn-220 (daughter is Pb-212) [Rn-220 is n=1; n=2 is Po-216]

$$\underset{C_{sec}(i_n,x,t_j)\ (Ci/m^3)}{2.39E\text{-}19} = \underset{C_{air}(Rn,x,t_0)\ (Ci/m^3)}{1.70E\text{-}16} \times \underset{\lambda_2\ (1/yr)}{1.46E+08} \times \underset{\lambda_3\ (1/yr)}{5.71E+02} \times$$

(4.14)

$$\left[\frac{\exp\left[- \underset{\lambda_1\ (1/yr)}{3.93E+05} \times \underset{\tau\ (s)}{1597} \times \underset{(yr/s)}{3.17E\text{-}08} \right]}{\left(\underset{\lambda_2\ (1/yr)}{1.46E+08} - \underset{\lambda_1\ (1/yr)}{3.93E+05} \right) \times \left(\underset{\lambda_3\ (1/yr)}{5.71E+02} - \underset{\lambda_1\ (1/yr)}{3.93E+05} \right)} + \right.$$

$$\frac{\exp\left[- \underset{\lambda_2\ (1/yr)}{1.46E+08} \times \underset{\tau\ (s)}{1597} \times \underset{(yr/s)}{3.17E\text{-}08} \right]}{\left(\underset{\lambda_1\ (1/yr)}{3.93E+05} - \underset{\lambda_2\ (1/yr)}{1.46E+08} \right) \times \left(\underset{\lambda_3\ (1/yr)}{5.71E+02} - \underset{\lambda_2\ (1/yr)}{1.46E+08} \right)} +$$

$$\left. \frac{\exp\left[- \underset{\lambda_3\ (1/yr)}{5.71E+02} \times \underset{\tau\ (s)}{1597} \times \underset{(yr/s)}{3.17E\text{-}08} \right]}{\left(\underset{\lambda_1\ (1/yr)}{3.93E+05} - \underset{\lambda_3\ (1/yr)}{5.71E+02} \right) \times \left(\underset{\lambda_2\ (1/yr)}{1.46E+08} - \underset{\lambda_3\ (1/yr)}{5.71E+02} \right)} \right]$$

Figure 4-25 Hand Calculation of the Air Concentration at the 5–10 km WSW Location on the Population Grid in Case 3a at Time Step 1 for the Pb-212 Daughter Product of Rn-220

Non-decayed Rn-222 concentration for daughter nuclide calculation

$$\underset{C_{air}(Rn222,x,t_0)\ (Ci/m^3)}{4.75E\text{-}15} = \underset{(yr/s)}{3.17E\text{-}08} \times \underset{X/Q\ (s/m^3)}{4.46E\text{-}09} \times \underset{Q_{0\_Rn}\ (Ci/yr)}{33.6} \qquad (4.15)$$

Downwind Pb-214 air concentration

Let n = 3 for Rn-222 (daughter is Pb-214) [Rn-222 is n=1; n=2 is Po-218]

$$\underset{C_{sec}(i_n,x,t_j)\ (Ci/m^3)}{2.05E\text{-}15} = \underset{C_{air}(Rn,x,t_0)\ (Ci/m^3)}{4.75E\text{-}15} \times \underset{\lambda_2\ (1/yr)}{1.17E+05} \times \underset{\lambda_3\ (1/yr)}{1.36E+04} \times$$

(4.14)

$$\left[\frac{\exp\left[- \underset{\lambda_1\ (1/yr)}{6.62E+01} \times \underset{\tau\ (s)}{1597} \times \underset{(yr/s)}{3.17E\text{-}08} \right]}{\left(\underset{\lambda_2\ (1/yr)}{1.17E+05} - \underset{\lambda_1\ (1/yr)}{6.62E+01} \right) \times \left(\underset{\lambda_3\ (1/yr)}{1.36E+04} - \underset{\lambda_1\ (1/yr)}{6.62E+01} \right)} + \right.$$

$$\frac{\exp\left[- \underset{\lambda_2\ (1/yr)}{1.17E+05} \times \underset{\tau\ (s)}{1597} \times \underset{(yr/s)}{3.17E\text{-}08} \right]}{\left(\underset{\lambda_1\ (1/yr)}{6.62E+01} - \underset{\lambda_2\ (1/yr)}{1.17E+05} \right) \times \left(\underset{\lambda_3\ (1/yr)}{1.36E+04} - \underset{\lambda_2\ (1/yr)}{1.17E+05} \right)} +$$

$$\left. \frac{\exp\left[- \underset{\lambda_3\ (1/yr)}{1.36E+04} \times \underset{\tau\ (s)}{1597} \times \underset{(yr/s)}{3.17E\text{-}08} \right]}{\left(\underset{\lambda_1\ (1/yr)}{6.62E+01} - \underset{\lambda_3\ (1/yr)}{1.36E+04} \right) \times \left(\underset{\lambda_2\ (1/yr)}{1.17E+05} - \underset{\lambda_3\ (1/yr)}{1.36E+04} \right)} \right]$$

Figure 4-26 Hand Calculation of the Air Concentration at the 5–10 km WSW Location on the Population Grid in Case 3a at Time Step 1 for the Pb-214 Daughter Product of Rn-222

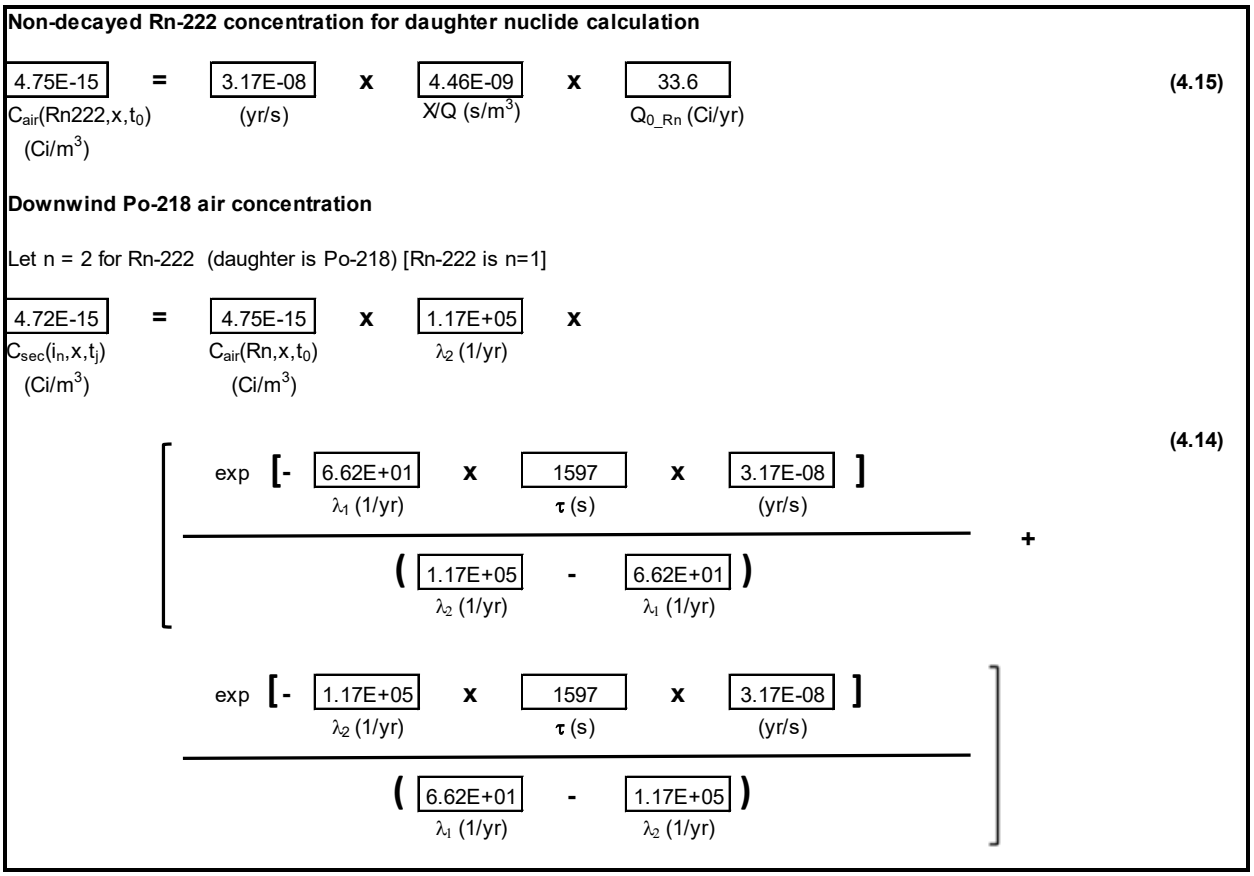

Figure 4-27 Hand Calculation of the Air Concentration at the 5–10 km WSW Location on the Population Grid in Case 3a at Time Step 1 for the Po-218 Daughter Product of Rn-222

4.3 Vegetation Concentrations

Five categories of vegetation are considered in MILDOS at each receptor location; the first three are for human consumption, and the last two are for livestock consumption: (1) edible aboveground vegetables, (2) potatoes, (3) other edible belowground vegetables, (4) pasture grass, and (5) hay (stored feed). The vegetation concentrations depend on the local air and ground concentrations as well as:

- the soil-to-plant transfer coefficient ($B_v(i)$),
- the soil areal density for surface mixing (ρ),
- the fraction of the total deposition retained on plant surfaces (F_r),
- the fraction of the foliar deposition reaching edible portions of vegetation (E_v),
- the decay constant accounting for weathering losses (λ_w),
- the duration of exposure while vegetation is growing (t_v), and
- the yield density of vegetation (Y_v).

Using the previously calculated air and ground concentrations (see Figures 4-9 and 4-3, respectively), the estimated concentrations of U-238 from 7.7 μm particulates from the Ore Pad in aboveground and belowground vegetables and potatoes at the Nearest Resident NNW

location are provided in Figure 4-28. The calculated values match those found in the Case 1 results. The estimated concentrations of U-238 from 7.7 μm particulates from the Ore Pad in pasture grass and stored feed at the Nearest Resident NNW location are provided in Figure 4-29. The calculated values match those found in the Case 1 results.

Similarly, using the previously calculated air and ground concentrations for the population analysis (see Figures 4-9 and 4-5, respectively), the estimated concentrations of U-238 from 7.7 μm particulates from the Ore Pad in aboveground and belowground vegetables and potatoes at 10–20 km SSW on the population grid are provided in Figure 4-30. The calculated values match those found in the Case 1 results. The estimated concentrations of U-238 from 7.7 μm particulates from the Ore Pad in pasture grass and stored feed at the 10–20 km SSW location on the population grid are provided in Figure 4-31. The calculated values match those found in the Case 1 results.

4.4 Meat and Milk Concentrations

The radionuclide concentrations in meat and milk depend on their concentrations in pasture grass and stored feed as calculated in the previous section, the radionuclide-specific feed-to-meat or feed-to-milk transfer coefficient (F_b or F_m), and the fractions of the total annual feed requirement that is assumed to be satisfied by pasture grass or locally grown feed (hay) (F_{pg} or F_h). The concentration of U-238 from 7.7 μm particulates from the Ore Pad in meat and milk at the Nearest Resident NNW receptor and 10–20 km SSW location on the population grid after time step 4 in Case 1 are provided in Figures 4-29 and 4-31, respectively. These values all match the results found in the Case 1 output results.

Concentration in Aboveground Leafy Vegetables

$$C_V(i,p,x,t_j)\ (\text{pCi/kg [wet weight]}) = 5.65\text{E-}03$$

$$= 10^{12} \times \frac{C_g(i,p,x,t_j)\ (\text{Ci/m}^2) = 2.97\text{E-}11 \times B_V(i)\ (\text{pCi/kg(wet) plant per pCi/kg (dry) soil}) = 0.0025}{\rho_s\ (\text{kg/m}^2\ [\text{dry weight}]) = 240} +$$

$$\frac{8.64 \times 10^{16}\ (\text{pCi-s/Ci-d}) \times C_{air}(i,p,x,t_j)\ (\text{Ci/m3}) = 3.23\text{E-}18 \times V_{dp}\ (\text{m/s}) = 0.01 \times F_r\ (\text{unitless}) = 0.2 \times E_v\ (\text{unitless}) = 1 \times \left[1 - \exp\left[-\left(\lambda_w\ (1/\text{d}) = 4.95\text{E-}02 \times t_v\ (\text{d}) = 60\right)\right]\right]}{Y_v\ (\text{kg [wet weight]/m}^2) = 2 \times \lambda_w\ (1/\text{d}) = 4.95\text{E-}02} \quad \textbf{(4.16)}$$

Concentration in Potato

$$C_V(i,p,x,t_j)\ (\text{pCi/kg [wet weight]}) = 8.44\text{E-}04$$

$$= 10^{12} \times \frac{C_g(i,p,x,t_j)\ (\text{Ci/m}^2) = 2.97\text{E-}11 \times B_V(i)\ (\text{pCi/kg(wet) plant per pCi/kg (dry) soil}) = 0.0025}{\rho_s\ (\text{kg/m}^2\ [\text{dry weight}]) = 240} +$$

$$\frac{8.64 \times 10^{16}\ (\text{pCi-s/Ci-d}) \times C_{air}(i,p,x,t_j)\ (\text{Ci/m3}) = 3.23\text{E-}18 \times V_{dp}\ (\text{m/s}) = 0.01 \times F_r\ (\text{unitless}) = 0.2 \times E_v\ (\text{unitless}) = 0.1 \times \left[1 - \exp\left[-\left(\lambda_w\ (1/\text{d}) = 4.95\text{E-}02 \times t_v\ (\text{d}) = 60\right)\right]\right]}{Y_v\ (\text{kg [wet weight]/m}^2) = 2 \times \lambda_w\ (1/\text{d}) = 4.95\text{E-}02} \quad \textbf{(4.16)}$$

Concentration in Belowground Vegetables

$$C_V(i,p,x,t_j)\ (\text{pCi/kg [wet weight]}) = 8.44\text{E-}04$$

$$= 10^{12} \times \frac{C_g(i,p,x,t_j)\ (\text{Ci/m}^2) = 2.97\text{E-}11 \times B_V(i)\ (\text{pCi/kg(wet) plant per pCi/kg (dry) soil}) = 0.0025}{\rho_s\ (\text{kg/m}^2\ [\text{dry weight}]) = 240} +$$

$$\frac{8.64 \times 10^{16}\ (\text{pCi-s/Ci-d}) \times C_{air}(i,p,x,t_j)\ (\text{Ci/m3}) = 3.23\text{E-}18 \times V_{dp}\ (\text{m/s}) = 0.01 \times F_r\ (\text{unitless}) = 0.2 \times E_v\ (\text{unitless}) = 0.1 \times \left[1 - \exp\left[-\left(\lambda_w\ (1/\text{d}) = 4.95\text{E-}02 \times t_v\ (\text{d}) = 60\right)\right]\right]}{Y_v\ (\text{kg [wet weight]/m } \lambda_w\ (1/\text{d}) = 2 \times 4.95\text{E-}02} \quad \textbf{(4.16)}$$

Figure 4-28 Concentration of U-238 from 7.7 μm Particulates from the Ore Pad in aboveground and belowground Vegetables and Potatoes at the Nearest Resident NNW Receptor Location after Time Step 4 in Case 1

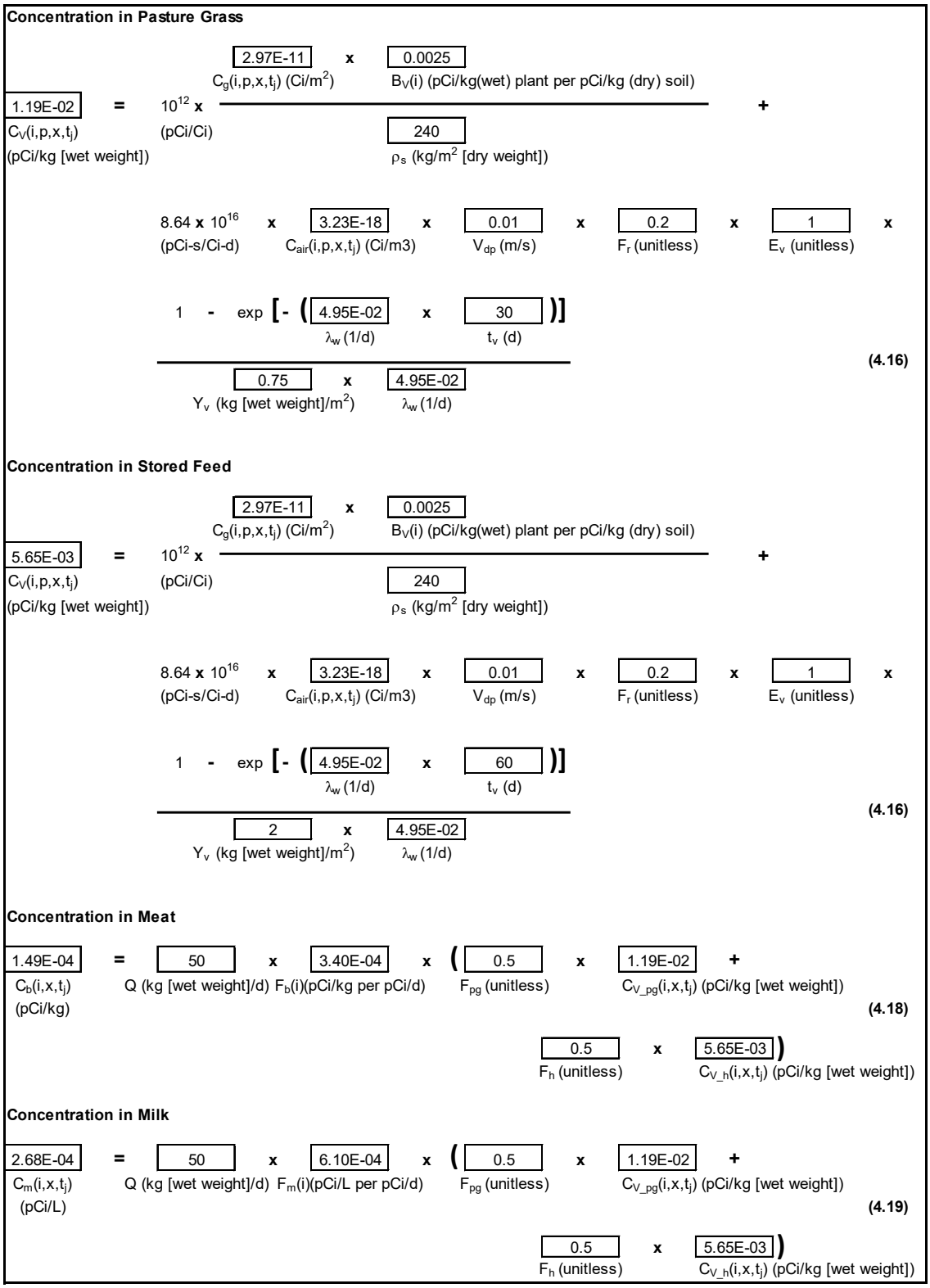

Figure 4-29 Concentration of U-238 from 7.7 μm Particulates from the Ore Pad in Animal Feed, Meat, and Milk at the Nearest Resident NNW Receptor Location after Time Step 4 in Case 1

Concentration in Aboveground Leafy Vegetables

$$C_V(i,p,x,t_j)\ (\text{pCi/kg [wet weight]}) = 3.66\text{E-}05$$

$$= 10^{12}\ (\text{pCi/Ci}) \times \frac{C_g(i,p,x,t_j)\ (\text{Ci/m}^2) = 1.92\text{E-}13 \times B_V(i)\ (\text{pCi/kg(wet) plant per pCi/kg (dry) soil}) = 0.0025}{\rho_s\ (\text{kg/m}^2\ \text{[dry weight]}) = 240} +$$

$$8.64 \times 10^{16}\ (\text{pCi-s/Ci-d}) \times C_{air}(i,p,x,t_j)\ (\text{Ci/m3}) = 2.09\text{E-}20 \times V_{dp}\ (\text{m/s}) = 0.01 \times F_r\ (\text{unitless}) = 0.2 \times E_v\ (\text{unitless}) = 1 \times$$

$$\frac{1 - \exp\left[-\left(\frac{\lambda_w\ (1/\text{d}) = 4.95\text{E-}02}{} \times t_v\ (\text{d}) = 60\right)\right]}{Y_v\ (\text{kg [wet weight]/m}^2) = 2 \times \lambda_w\ (1/\text{d}) = 4.95\text{E-}02} \qquad (4.16)$$

Concentration in Potato

$$C_V(i,p,x,t_j)\ (\text{pCi/kg [wet weight]}) = 5.46\text{E-}06$$

$$= 10^{12}\ (\text{pCi/Ci}) \times \frac{C_g(i,p,x,t_j)\ (\text{Ci/m}^2) = 1.92\text{E-}13 \times B_V(i)\ (\text{pCi/kg(wet) plant per pCi/kg (dry) soil}) = 0.0025}{\rho_s\ (\text{kg/m}^2\ \text{[dry weight]}) = 240} +$$

$$8.64 \times 10^{16}\ (\text{pCi-s/Ci-d}) \times C_{air}(i,p,x,t_j)\ (\text{Ci/m3}) = 2.09\text{E-}20 \times V_{dp}\ (\text{m/s}) = 0.01 \times F_r\ (\text{unitless}) = 0.2 \times E_v\ (\text{unitless}) = 0.1 \times$$

$$\frac{1 - \exp\left[-\left(\frac{\lambda_w\ (1/\text{d}) = 4.95\text{E-}02}{} \times t_v\ (\text{d}) = 60\right)\right]}{Y_v\ (\text{kg [wet weight]/m}^2) = 2 \times \lambda_w\ (1/\text{d}) = 4.95\text{E-}02} \qquad (4.16)$$

Concentration in Belowground Vegetables

$$C_V(i,p,x,t_j)\ (\text{pCi/kg [wet weight]}) = 5.46\text{E-}06$$

$$= 10^{12}\ (\text{pCi/Ci}) \times \frac{C_g(i,p,x,t_j)\ (\text{Ci/m}^2) = 1.92\text{E-}13 \times B_V(i)\ (\text{pCi/kg(wet) plant per pCi/kg (dry) soil}) = 0.0025}{\rho_s\ (\text{kg/m}^2\ \text{[dry weight]}) = 240} +$$

$$8.64 \times 10^{16}\ (\text{pCi-s/Ci-d}) \times C_{air}(i,p,x,t_j)\ (\text{Ci/m3}) = 2.09\text{E-}20 \times V_{dp}\ (\text{m/s}) = 0.01 \times F_r\ (\text{unitless}) = 0.2 \times E_v\ (\text{unitless}) = 0.1 \times$$

$$\frac{1 - \exp\left[-\left(\frac{\lambda_w\ (1/\text{d}) = 4.95\text{E-}02}{} \times t_v\ (\text{d}) = 60\right)\right]}{Y_v\ (\text{kg [wet weight]/m}^2) = 2 \times \lambda_w\ (1/\text{d}) = 4.95\text{E-}02} \qquad (4.16)$$

Figure 4-30 Concentration of U-238 from 7.7 μm Particulates from the Ore Pad in aboveground and belowground Vegetables and Potatoes at the 10–20 km SSW Location on the Population Grid after Time Step 4 in Case 1

Concentration in Pasture Grass

$$C_V(i,p,x,t_j)\ (\text{pCi/kg [wet weight]}) = 10^{12}\ (\text{pCi/Ci}) \times \frac{1.92\text{E-}13\ C_g(i,p,x,t_j)\ (\text{Ci/m}^2) \times 0.0025\ B_V(i)\ (\text{pCi/kg(wet) plant per pCi/kg (dry) soil})}{240\ \rho_s\ (\text{kg/m}^2\ \text{[dry weight]})} +$$

$$8.64 \times 10^{16}\ (\text{pCi-s/Ci-d}) \times 2.09\text{E-}20\ C_{air}(i,p,x,t_j)\ (\text{Ci/m3}) \times 0.01\ V_{dp}\ (\text{m/s}) \times 0.2\ F_r\ (\text{unitless}) \times 1\ E_v\ (\text{unitless}) \times$$

$$\frac{1 - \exp\left[-\left(\frac{4.95\text{E-}02\ \lambda_w\ (1/\text{d})}{} \times 30\ t_v\ (\text{d})\right)\right]}{0.75\ Y_v\ (\text{kg [wet weight]/m}^2) \times 4.95\text{E-}02\ \lambda_w\ (1/\text{d})} \qquad \textbf{(4.16)}$$

Concentration in Stored Feed

$$C_V(i,p,x,t_j)\ (\text{pCi/kg [wet weight]}) = 10^{12}\ (\text{pCi/Ci}) \times \frac{1.92\text{E-}13\ C_g(i,p,x,t_j)\ (\text{Ci/m}^2) \times 0.0025\ B_V(i)\ (\text{pCi/kg(wet) plant per pCi/kg (dry) soil})}{240\ \rho_s\ (\text{kg/m}^2\ \text{[dry weight]})} +$$

$$8.64 \times 10^{16}\ (\text{pCi-s/Ci-d}) \times 2.09\text{E-}20\ C_{air}(i,p,x,t_j)\ (\text{Ci/m3}) \times 0.01\ V_{dp}\ (\text{m/s}) \times 0.2\ F_r\ (\text{unitless}) \times 1\ E_v\ (\text{unitless}) \times$$

$$\frac{1 - \exp\left[-\left(\frac{4.95\text{E-}02\ \lambda_w\ (1/\text{d})}{} \times 60\ t_v\ (\text{d})\right)\right]}{2\ Y_v\ (\text{kg [wet weight]/m}^2) \times 4.95\text{E-}02\ \lambda_w\ (1/\text{d})} \qquad \textbf{(4.16)}$$

Concentration in Meat

$$C_b(i,x,t_j)\ (\text{pCi/kg}) = 50\ Q\ (\text{kg [wet weight]/d}) \times 3.40\text{E-}04\ F_b(i)\ (\text{pCi/kg per pCi/d}) \times \left(0.5\ F_{pg}\ (\text{unitless}) \times 7.72\text{E-}05\ C_{V\_pg}(i,x,t_j)\ (\text{pCi/kg [wet weight]}) + 0.5\ F_h\ (\text{unitless}) \times 3.66\text{E-}05\ C_{V\_h}(i,x,t_j)\ (\text{pCi/kg [wet weight]})\right) \qquad \textbf{(4.18)}$$

Concentration in Milk

$$C_m(i,x,t_j)\ (\text{pCi/L}) = 50\ Q\ (\text{kg [wet weight]/d}) \times 6.10\text{E-}04\ F_m(i)\ (\text{pCi/L per pCi/d}) \times \left(0.5\ F_{pg}\ (\text{unitless}) \times 7.72\text{E-}05\ C_{V\_pg}(i,x,t_j)\ (\text{pCi/kg [wet weight]}) + 0.5\ F_h\ (\text{unitless}) \times 3.66\text{E-}05\ C_{V\_h}(i,x,t_j)\ (\text{pCi/kg [wet weight]})\right) \qquad \textbf{(4.19)}$$

Figure 4-31 Concentration of U-238 from 7.7 μm Particulates from the Ore Pad in Animal Feed, Meat, and Milk at the 10–20 km SSW Location on the Population Grid after Time Step 4 in Case 1

5 HUMAN EXPOSURE MODELS

This Section considers the exposure model calculations used in MILDOS. Potential receptors, including individuals and population groups, are considered. Exposure pathways include inhalation of dispersed air and resuspended material using the total air concentration results as verified in Section 4.2, external radiation from ore material in the air (Section 4.2) and on the ground (Section 4.1), and ingestion of ore-associated radioactivity in locally grown foods (Sections 4.3 and 4.4). Inhalation exposure is covered in Section 5.1; external exposure is covered in Section 5.2; and ingestion exposure is covered in Section 5.3.

5.1 Inhalation

5.1.1 Particulates

The adult effective dose coefficients (DCs) used in MILDOS are specific to a given receptor type (adult, teenager, child, or infant), particle size (0.1, 0.15, 0.2, 0.3, 0.5, 1, 2, 3, 5, 10, 20, or 50 μm), and solubility class (day, week, or year). For particle sizes between those listed, a linear interpolation is used to calculate the DC before use in an inhalation exposure calculation.

In some cases, such as for U-238, the DC used in the code calculation includes the contribution from its U-234 daughter. Thus, for inhalation calculations involving U-238 such as shown in Figure 5-1, the U-238 inhalation DC for 5 and 10 μm particulates are 0.0875 and 0.0501 mrem/pCi, respectively, for the Y solubility class as used in Case 1.

Inhalation Dose from U-238 Particulates

$$\underset{D_{inh,kop}(x,t_j)\ (mrem/yr)}{1.59E\text{-}03} = 10^{12}\ (pCi/Ci) \times \left(\underset{C_{air}(i,p_1,x,t_j)\ (Ci/m^3)}{3.23E\text{-}18} \times \underset{DC_{inh,ikop1}\ (mrem/pCi)}{6.73E\text{-}02} + \underset{C_{air}(i,p_2,x,t_j)\ (Ci/m^3)}{3.41E\text{-}19} \times \underset{DC_{inh,ikop2}\ (mrem/pCi)}{0.000149} \right) \times \underset{\text{Inhalation Rate}\ (m^3/yr)}{7300} \quad \textbf{(5.3)}$$

where

$$\underset{DC_{inh,ikop1}\ (mrem/pCi)}{6.73E\text{-}02} = \frac{\underset{\text{particle size}\ (\mu m)}{7.7} - \underset{S_{sp}\ (\mu m)}{5}}{\underset{S_{lp}\ (\mu m)}{10} - \underset{S_{sp}\ (\mu m)}{5}} \times \left(\underset{DC_{lp}\ (mrem/pCi)}{0.0501} - \underset{DC_{sp}\ (mrem/pCi)}{0.0875} \right) + \underset{DC_{sp}\ (mrem/pCi)}{0.0875}$$

Figure 5-1 Inhalation Dose Rate to Nearest Resident NNW from U-238 from All Particulates (7.7 μm and 54 μm) from the Ore Pad during Time Step 4 in Case 1

Since the 7.7 μm particulate size is intermediate between 5 and 10 μm for which DC values are available, its DC value is calculated by adding the value for the smaller 5 μm size (DC_{sp}) to the difference between the DC values scaled by the difference in particle size between the particle size of interest (7.7 μm) and the smaller particle size (S_{sp}; 5 μm) relative to the difference between the larger (S_{lp}, 10 μm) and smaller particle sizes. The bottom of Figure 5-1 shows the calculation for the U-238 inhalation DC for a 7.7 μm particulate for the Y solubility class.

The calculated dose rate of 1.59E-3 mrem/yr in Figure 5-1 matches the value in the Case 1 results. The air concentration for 7.7 μm particulates (1st particle size) was previously calculated in Figure 4-9; the air concentration for 54 μm particulates (2nd particle size) was taken from the

Case 1 results. The U-238 DC for the 7.7 μm size (6.73E-2 mrem/pCi) was calculated at the bottom of Figure 5-1 as previously discussed, and the DC for the 54 μm size (1.49E-4 mrem/pCi) is the sum of the values for U-238 (7.10E-5 mrem/pCi) and U-234 (7.82E-5 mrem/pCi) for 50 μm particulates, as shown in Table B-3 in the manual. In MILDOS, the DC for a 50 μm particulate is used for particulates larger than 50 μm; no scaling of DCs is performed. In this example, the receptor was an adult, so no DC multiplier was used to adjust for age. Also note that the breathing rate used for inhalation calculations is fixed at 7,300 m^3/yr and not a user input value. See the following for the population inhalation calculations.

The individual age-specific inhalation dose calculations for individuals residing at the 10–20 km SSW location on the population grid are presented in Figure 5-2. The total population dose rate in that population grid segment was calculated to be 1.20E-2 person-mrem/yr from inhalation of U-238 in particulates from the Ore Pad during time step 4 in Case 1. The code results contained the same value.

5.1.2 Radon

The calculation of the inhalation dose from Rn-222 is based on the extent of the indoor and outdoor equilibrium between Rn-222 and its daughter radionuclides at the receptor location. The indoor equilibrium fraction is specified by the user, and the outdoor equilibrium fraction can be specified by the user or calculated based on the downwind air concentrations of radon and its daughter radionuclides. The calculation of the outdoor equilibrium fraction and the inhalation dose to the Nearest Resident NNW in Case 1 from the Ore Pad is shown in the top portion of Figure 5-3. The calculated outdoor equilibrium fraction of 0.276 agrees with the value of 0.277 listed in the standard output results for Case 1. The dose of 0.384 mrem/yr from Rn-222 during time step 4 matches the output results for Case 1.

The calculation of the effective inhalation dose from Rn-220 follows a different methodology than that used for Rn-222 because of Rn-220's much shorter half-life. In most situations, the majority of Rn-220 released from the source will have decayed by the time the plume reaches a receptor. The Rn-220 dose is calculated using the concept of the working level (WL) as shown at the bottom of Figure 5-3. The Rn-220 inhalation dose of 1.07E-4 mrem/yr to the Nearest Resident NNW from the Ore Pad during time step 4 in Case 1 matches the value in the Case 1 output results.

Calculation of the effective population dose from radon at the population segment 10-20 km in the SSW direction from all sources during time step 4 in Case 1 is shown in Figure 5-4. Here, the Rn-222 dose rate is estimated to be 4,230 person-mrem/yr and the Rn-220 dose rate to be 0.658 person-mrem/yr. Both values match the output results for Case 1.

Infant Individual Dose

4.93E-05	=	10^{12}	x	(2.09E-20	x	6.73E-02	+	1.56E-21	x	0.000149)	x	4.8	x	7300	**(5.3)**
$D_{inh,kop}(x,t_j)$		(pCi/Ci)		$C_{air}(i,p_1,x,t_j)$		$DC_{inh,ikop1}$		$C_{air}(i,p_2,x,t_j)$		$DC_{inh,ikop2}$		Age multiplier		Inhalation Rate	
(mrem/yr)				(Ci/m^3)		(mrem/pCi)		(Ci/m^3)		(mrem/pCi)				(m^3/yr)	

Child Individual Dose

2.36E-05	=	10^{12}	x	(2.09E-20	x	6.73E-02	+	1.56E-21	x	0.000149)	x	2.3	x	7300	**(5.3)**
$D_{inh,kop}(x,t_j)$		(pCi/Ci)		$C_{air}(i,p_1,x,t_j)$		$DC_{inh,ikop1}$		$C_{air}(i,p_2,x,t_j)$		$DC_{inh,ikop2}$		Age multiplier		Inhalation Rate	
(mrem/yr)				(Ci/m^3)		(mrem/pCi)		(Ci/m^3)		(mrem/pCi)				(m^3/yr)	

Teenager Individual Dose

1.23E-05	=	10^{12}	x	(2.09E-20	x	6.73E-02	+	1.56E-21	x	0.000149)	x	1.2	x	7300	**(5.3)**
$D_{inh,kop}(x,t_j)$		(pCi/Ci)		$C_{air}(i,p_1,x,t_j)$		$DC_{inh,ikop1}$		$C_{air}(i,p_2,x,t_j)$		$DC_{inh,ikop2}$		Age multiplier		Inhalation Rate	
(mrem/yr)				(Ci/m^3)		(mrem/pCi)		(Ci/m^3)		(mrem/pCi)				(m^3/yr)	

Adult Individual Dose

1.03E-05	=	10^{12}	x	(2.09E-20	x	6.73E-02	+	1.56E-21	x	0.000149)	x	1	x	7300	**(5.3)**
$D_{inh,kop}(x,t_j)$		(pCi/Ci)		$C_{air}(i,p_1,x,t_j)$		$DC_{inh,ikop1}$		$C_{air}(i,p_2,x,t_j)$		$DC_{inh,ikop2}$		Age multiplier		Inhalation Rate	
(mrem/yr)				(Ci/m^3)		(mrem/pCi)		(Ci/m^3)		(mrem/pCi)				(m^3/yr)	

Population Segment Inhalation Dose

1.20E-02	=	883	x	(0.0179	x	4.93E-05	+	0.1647	x	2.36E-05					
$D_{inh,p}(x,t_j)$		Persons		F_{infant}		$D_{inh,infant}(x,t_j)$		F_{child}		$D_{inh,child}(x,t_j)$					
(mrem/yr)						(mrem/yr)				(mrem/yr)					
				+	0.1957	x	1.23E-05	+	0.6217	x	1.03E-05)				
					F_{teen}		$D_{inh,teen}(x,t_j)$		F_{adult}		$D_{inh,adult}(x,t_j)$				
							(mrem/yr)				(mrem/yr)				

Figure 5-2 Population Inhalation Dose from U-238 from the Ore Pad at the 10–20 km SSW Location on the Population Grid after Time Step 4 in Case 1

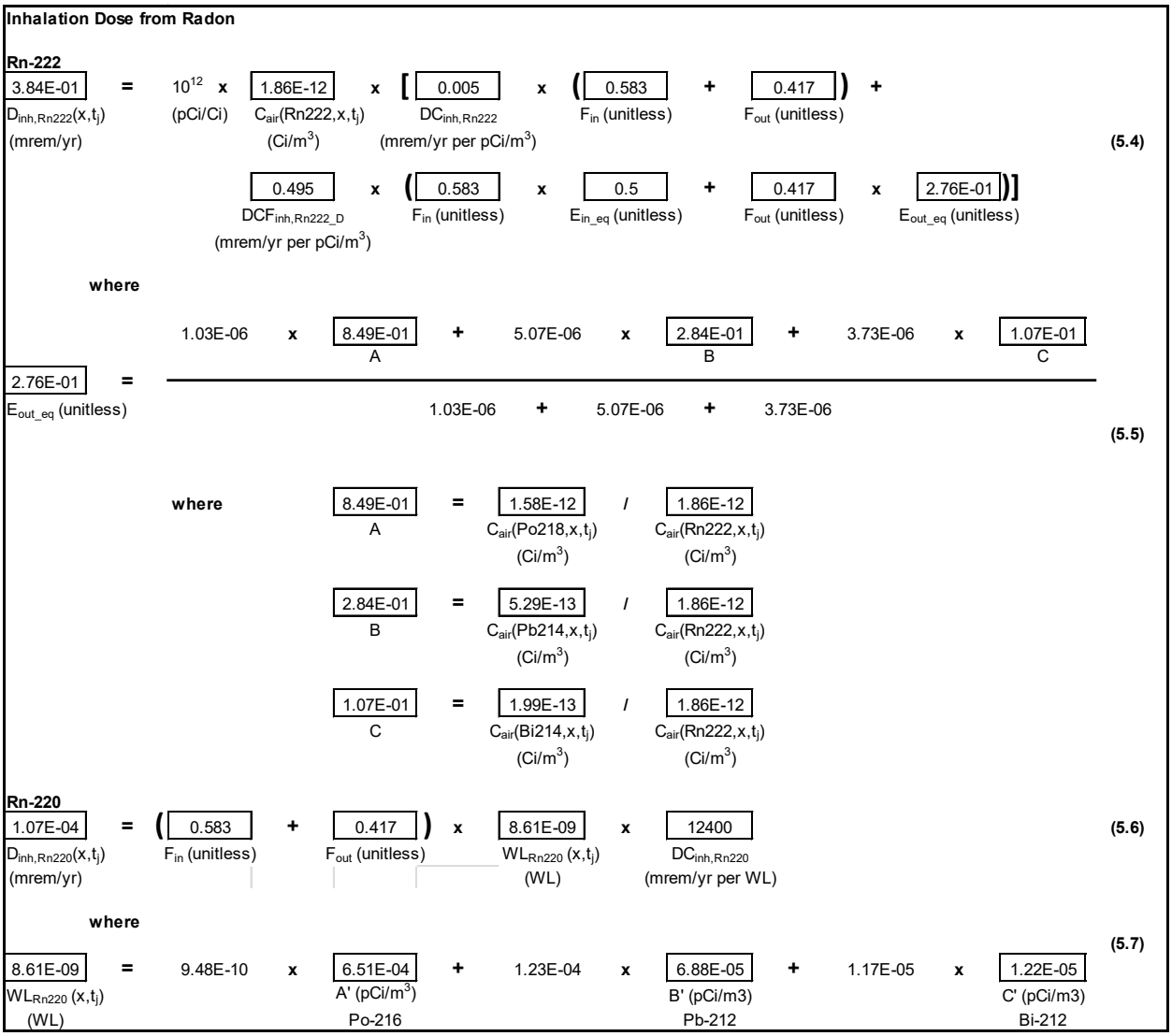

Figure 5-3 Radon Inhalation Dose to Nearest Resident NNW from the Ore Pad during Time Step 4 in Case 1

5.2 External

The calculation of external dose from cloudshine and groundshine from U-238 in 7.7 μm particulates for an individual receptor and a population segment are presented in Figure 5-5. The value of 8.84E-5 mrem/yr for the individual dose rate and the value of 5.04E-4 person-mrem/yr for the population segment both match the Case 1 output results.

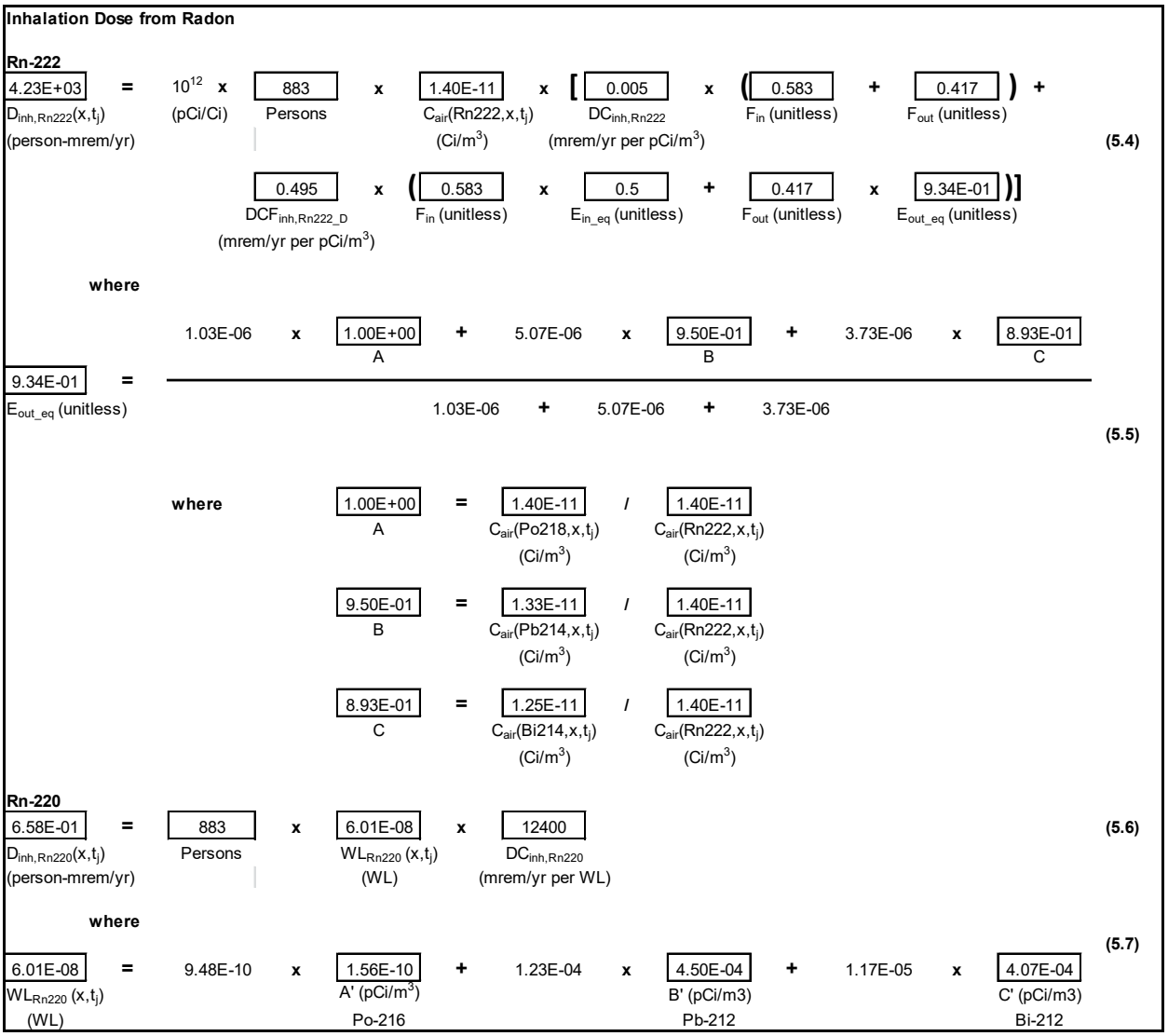

Figure 5-4 Radon Inhalation Population Dose from All Sources at the 10–20 km SSW Location on the Population Grid after Time Step 4 in Case 1

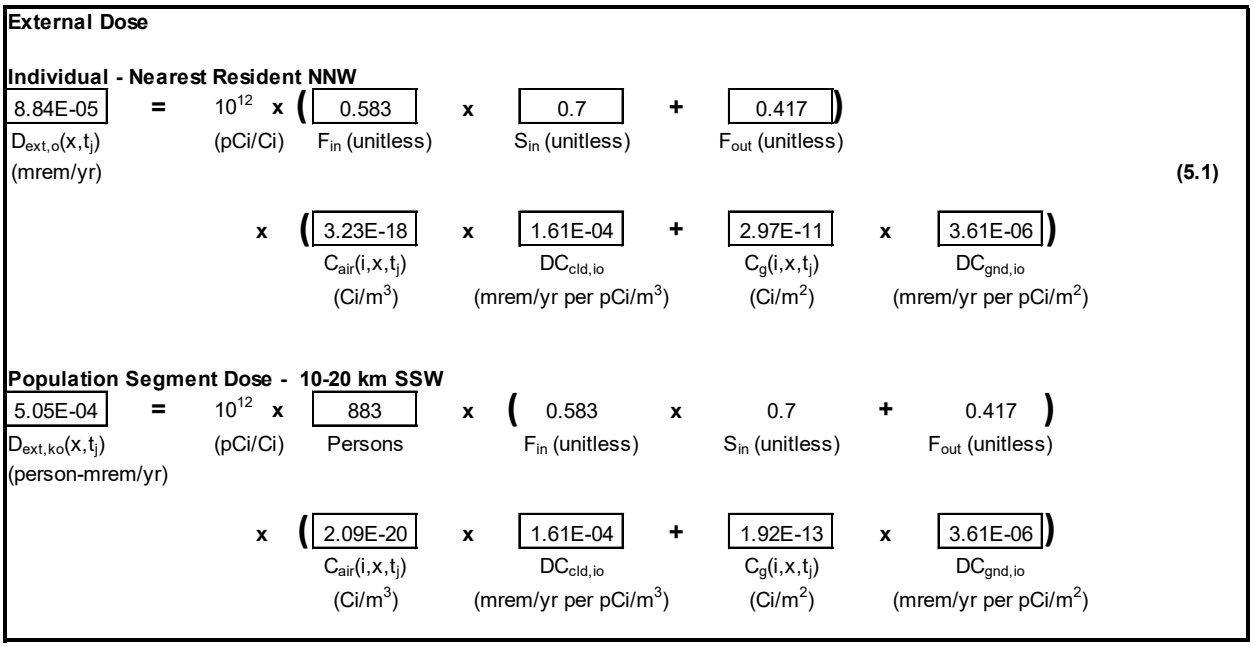

Figure 5-5 External Dose from Groundshine and Cloudshine from U-238 in 7.7 μm Particulates from the Ore Pad during Time Step 4 in Case 1

5.3 Ingestion

The ingestion dose attributed to a specific radionuclide is calculated by multiplying an individual's ingestion intake rate of the radionuclide by the age-specific ingestion DC for that radionuclide. In MILDOS, the ingestion intake rate calculation for an individual depends on the following input:

- milk and meat ingestion rates for age group *k* (U_{mk}, U_{bk}),
- average milk concentration for radionuclide *i* during time step *j*,
- average meat concentration for radionuclide *i* during time step *j*,
- fraction of activity remaining in vegetables after food preparation (F_{va}),
- vegetable ingestion rate for age group *k* (U_{vk}),
- fraction of vegetable category *c* consumed by age group *k* (F_{vck}), and
- concentration of radionuclide *i* in vegetation type *v* during time step *j*.

The ingestion rate intake and ingestion exposure dose rates associated with the Nearest Resident NNW in Case 1 are presented in Figure 5-6 for U-238 in 7.7 μm particulates for time step 4. The U-238 concentration in the three vegetable types was calculated in Figure 4-27, and the milk and meat concentration calculations were shown in Figure 4-28. The ingestion dose of 1.03E-4 mrem/yr calculated in Figure 5-6 matches the Case 1 output results for the sum of doses from vegetable, meat, and milk ingestion.

For population exposure, MILDOS assumes that all locally grown food is consumed, either locally or outside the region. The following additional input parameters are required to estimate the population ingestion dose:

Ingestion Intake

1.87E-01 = 130 x 2.68E-04 + 78.3 x 1.49E-04 + 0.5 x 105 x (5.10)

$I_k(i,x,t_j)$ (pCi/yr) = U_{mk} (L/yr) x $C_m(i,x,t_j)$ (pCi/L) + U_{bk} (kg/yr) x $C_b(i,x,t_j)$ (pCi/kg) + F_{va} (unitless) x U_{vk} (kg/yr) x

(0.38 x 5.65E-03 + 0.57 x 8.44E-04 + 0.05 x 8.44E-04)

F_{v1k} (kg/yr) x $C_{v1}(i,x,t_j)$ (pCi/kg) + F_{v2k} (kg/yr) x $C_{v2}(i,x,t_j)$ (pCi/kg) + F_{v3k} (kg/yr) x $C_{v3}(i,x,t_j)$ (pCi/kg)

Effective Ingestion Dose

1.03E-04 = 1.87E-01 x 5.53E-04 (5.11)

$D_{ing,ko}(I,x,t_j)$ (mrem/yr) = $I_k(i,x,t_j)$ (pCi/yr) x $DC_{ing,iko}$ (mrem/pCi ingested)

Figure 5-6 Ingestion Dose from U-238 in 7.7 μm Particulates to Nearest Resident NNW from the Ore Pad during Time Step 4 in Case 1

Fraction of Meat Produced in Area Consumed by Adults

$$F_{fk}\ (\text{unitless}) = \frac{F_{pk}\ (\text{unitless}) \times U_{fk}\ (\text{kg/yr or L/yr})}{F_{pk1}\times U_{fk1} + F_{pk2}\times U_{fk2} + F_{pk1}\times U_{fk3} + F_{pk4}\times U_{fk4}}$$

0.7735 = 0.6217 x 127.9 (5.14)

F_{fk} (unitless) = F_{pk} (unitless) x U_{fk} (kg/yr or L/yr) / (0.0179 x 0 + 0.1647 x 48.7 + 0.1957 x 78 + 0.6217 x 127.9)

F_{pk1} (unitless) x U_{fk1} (kg/yr) + F_{pk2} (unitless) x U_{fk2} (kg/yr) + F_{pk1} (unitless) x U_{fk3} (kg/yr) + F_{pk4} (unitless) x U_{fk4} (kg/yr)

Vegetable Concentrations of U-238 7.7 μm Particulates at 10 - 20 km SSW on the Population Grid

2.97E-05 = 0.78 x 3.66E-05 + 0.2 x 5.46E-06 + 0.02 x 5.46E-06 (5.12)

$C_{v\_avg}(i,s,t_j)$ (pCi/kg) = W_{v1s} (unitless) x $C_{v1s}(i,x,t_j)$ (pCi/kg) + W_{v2s} (unitless) x $C_{v2s}(i,x,t_j)$ (pCi/kg) + W_{v3s} (unitless) x $C_{v3s}(i,x,t_j)$ (pCi/kg)

Figure 5-7 Sample Calculations Used in Population Ingestion Dose Analysis for U-238 in 7.7 μm Particulates from the Ore Pad during Time Step 4 in Case 1

For population exposure, MILDOS assumes that all locally grown food is consumed, either locally or outside the region. The following additional input parameters are required to estimate the population ingestion dose:

- weighting factor for vegetable type *v* in population segment *s* (fraction of total production) (W_{vs}),
- annual production rate of food type *f* in population segment *s* (P_{fs}), and
- fraction of the population belonging to age group *k* (F_{pk}).

The fraction of each food type consumed by each age group (F_{fk}) is first calculated. The calculation of the fraction of the amount of meat produced in an area that is consumed by adults is shown in Figure 5-7. The remaining values as calculated in the verification spreadsheet are shown in Table 5-1.

Table 5-1 Fraction of Food Type Consumed by Age Group

Age Group	Vegetables	Meat	Milk
Infant	0	0	0.0178
Child	0.1417	0.0780	0.1850
Teenager	0.2168	0.1485	0.2728
Adult	0.6415	0.7735	0.5244

For the population segment located 10–20 km SSW on the population grid in Case 1, the total activity of U-238 in each food group from 7.7 μm particulates from the Ore Pad at time step 4 is calculated as provided in Figure 5-8. In conjunction with the fraction consumed by each age group, the total effective population ingestion dose is calculated as shown in Figure 5-9. The total population ingestion dose of 8.23E-7 person-rem/yr matches the Case 1 output results for the sum of doses from vegetable, meat, and milk ingestion.

Activity of U-238 from 7.7 μm Particulates in Each Food Type

1.46E+00	=	4.90E+04	x	2.97E-05	vegetables	**(5.13)**
$Q_v(i,t_j)$ (pCi/yr)		P_{vs} (kg/yr)		$C_{v\_avg}(i,s,t_j)$ (pCi/kg)		
7.83E-02	=	8.10E+04	x	9.67E-07	meat	
$Q_b(i,t_j)$ (pCi/yr)		P_{bs} (kg/yr)		$C_b(i,s,t_j)$ (pCi/kg)		
1.02E-03	=	5.90E+02	x	1.73E-06	milk	
$Q_m(i,t_j)$ (pCi/yr)		P_{ms} (kg/yr)		$C_m(i,s,t_j)$ (pCi/kg)		

Figure 5-8 Activity of U-238 in Food from 7.7 μm Particulates from the Ore Pad at the 10–20 km SSW Location on the Population Grid at Time Step 4 in Case 1

Total Effective Population Ingestion Dose for U-238 in 7.7 μm Particulates for Each Age Group

2.92E-07	=	10^{-3} x (	0.5	x	1.46E+00	x	0.6415	x	5.53E-04			
$PD_{ing,ko}(t_j)$ (person-rem/yr)		(rem/mrem)	F_{va} (unitless)		$Q_v(i,t_j)$ (pCi/yr)		F_{vk} (unitless)		$DC_{ing,iko}$ (mrem/pCi ingested)			
		+	1	x	7.83E-02	x	0.7735	x	5.53E-04		Adult	
			F_{ba} (unitless)		$Q_b(i,t_j)$ (pCi/yr)		F_{bk} (unitless)		$DC_{ing,iko}$ (mrem/pCi ingested)			
		+	1	x	1.02E-03	x	0.5244	x	5.53E-04)			
			F_{ma} (unitless)		$Q_m(i,t_j)$ (pCi/yr)		F_{mk} (unitless)		$DC_{ing,iko}$ (mrem/pCi ingested)			
2.91E-07	=	10^{-3} x (	0.5	x	1.46E+00	x	0.2168	x	1.71E-03			
$PD_{ing,ko}(t_j)$ (person-rem/yr)		(rem/mrem)	F_{va} (unitless)		$Q_v(i,t_j)$ (pCi/yr)		F_{vk} (unitless)		$DC_{ing,iko}$ (mrem/pCi ingested)			
		+	1	x	7.83E-02	x	0.1485	x	1.71E-03		Teenager	
			F_{ba} (unitless)		$Q_b(i,t_j)$ (pCi/yr)		F_{bk} (unitless)		$DC_{ing,iko}$ (mrem/pCi ingested)			
		+	1	x	1.02E-03	x	0.2728	x	1.71E-03)			
			F_{ma} (unitless)		$Q_m(i,t_j)$ (pCi/yr)		F_{mk} (unitless)		$DC_{ing,iko}$ (mrem/pCi ingested)			
2.40E-07	=	10^{-3} x (	0.5	x	1.46E+00	x	0.1417	x	2.19E-03			
$PD_{ing,ko}(t_j)$ (person-rem/yr)		(rem/mrem)	F_{va} (unitless)		$Q_v(i,t_j)$ (pCi/yr)		F_{vk} (unitless)		$DC_{ing,iko}$ (mrem/pCi ingested)			
		+	1	x	7.83E-02	x	0.0780	x	2.19E-03		Child	
			F_{ba} (unitless)		$Q_b(i,t_j)$ (pCi/yr)		F_{bk} (unitless)		$DC_{ing,iko}$ (mrem/pCi ingested)			
		+	1	x	1.02E-03	x	0.1850	x	2.19E-03)			**(5.15)**
			F_{ma} (unitless)		$Q_m(i,t_j)$ (pCi/yr)		F_{mk} (unitless)		$DC_{ing,iko}$ (mrem/pCi ingested)			
6.34E-10	=	10^{-3} x (	0.5	x	1.46E+00	x	0.0000	x	3.49E-02			
$PD_{ing,ko}(t_j)$ (person-rem/yr)		(rem/mrem)	F_{va} (unitless)		$Q_v(i,t_j)$ (pCi/yr)		F_{vk} (unitless)		$DC_{ing,iko}$ (mrem/pCi ingested)			
		+	1	x	7.83E-02	x	0.0000	x	3.49E-02		Infant	
			F_{ba} (unitless)		$Q_b(i,t_j)$ (pCi/yr)		F_{bk} (unitless)		$DC_{ing,iko}$ (mrem/pCi ingested)			
		+	1	x	1.02E-03	x	0.0178	x	3.49E-02)			
			F_{ma} (unitless)		$Q_m(i,t_j)$ (pCi/yr)		F_{mk} (unitless)		$DC_{ing,iko}$ (mrem/pCi ingested)			

Total Effective Population Ingestion Dose for U-238 in 7.7 μm Particulates

8.23E-07	=	6.34E-10	+	2.40E-07	+	2.91E-07	+	2.92E-07	
$PD_{ing}(t_j)$ (person-rem/yr)		$PD_{ing,ko}(t_j)$ (person-rem/yr) infant		$PD_{ing,ko}(t_j)$ (person-rem/yr) child		$PD_{ing,ko}(t_j)$ (person-rem/yr) teenager		$PD_{ing,ko}(t_j)$ (person-rem/yr) adult	

Figure 5-9 Population Ingestion Dose from U-238 from the Ore Pad from Food Grown at the 10–20 km SSW Location on the Population Grid at Time Step 4 in Case 1

APPENDIX A
VARIABLE DEFINITIONS

λ_{Rn220}	Rn-220 decay constant (1/d)
λ_{Rn222}	Rn-222 decay constant (1/d)
ρ_a	density of air (g/m^3)
ρ_o	bulk density of the ore material (g/cm^3)
ρ_p	particle density (g/m^3)
σz	vertical dispersion coefficient (m)
σ_{yb}	buoyancy-induced horizontal dispersion coefficient (m)
σ_{zb}	buoyancy-induced vertical dispersion coefficient (m)
A_o	active area of the ore zone (m^2)
C_a	local air concentration (Ci/m^3)
C_{oRa224}	concentration of Ra-224 in the ore (pCi/g)
C_{oRa226}	concentration of Ra-226 in the ore (pCi/g)
$\overline{C_{\sec}}(i,x)$	sector-average air concentration of radionuclide *i* at distance *x* (Ci/m^3)
c_h	empirical constant to relate shear velocity to horizontal flux (1 x 10^2 g-s^2/m^4)
c_t	dimensionless coefficient equal to 0.1
c_v	coefficient of proportionality for vertical flux (2 x 10^{-6} g/m^2-s)
C_{wRn220}	Rn-220 concentration in process water (pCi/L)
C_{wRn222}	Rn-222 concentration in process water (pCi/L,
D_o	average thickness of the ore zone (m)
d	average diameter of saltating particle (m)
d_p	particle diameter for particulate p (μm)
d_s	inside diameter of the emission stack (m)
E_p	release elevation, the reference point for the release height (m)
E_r	receptor elevation (m)
E_{Rn220}	emanating power for Rn-220 (unitless)
E_{Rn222}	emanating power for Rn-222 (unitless)
F_{ix}	water discharge rate from resin unloading of ion exchange columns (L/d)
f_{others}	fraction of Pb-210 relative to U-238 released through the drying/packaging facility stack (unitless)
F_p	“purge” rate of treated water (L/d)
f_{Ra}	fraction of Ra-226 relative to U-238 released through the drying/packaging facility stack (unitless)
f_{Rn}	fraction of radon source carried by circulating water (unitless)
f_s	fraction of production released through the drying/packaging facility stack (unitless)
f_{Th}	fraction of Th-230 relative to U-238 released through the drying/packaging facility stack (unitless)

g	gravitational acceleration (9.80665 m/s^2)
Δh	plume rise (m)
H	effective release height (m)
h	physical release height (m)
h_v	vertical (gravitational) settling of the plume (m),
L	mixing layer height, sometimes referred to as the lid height (m)
L_{am}	average mixing layer height in the morning (m)
L_{pm}	average mixing layer height in the afternoon (m)
l	normal adiabatic lapse rate of the atmosphere (0.0098 K/m)
M_{ore}	average mass of ore material in a mud pit (g)
N_{ix}	number of ion exchange unloadings per day
N_{pit}	number of mud pits generated per year
P_c	plume-path coefficient (unitless)
P_{ix}	porosity of the ion exchange resin (unitless)
p_{tm}	percent of tailing mass that has a diameter smaller than 20 μm (unitless)
$PB210_{dp}$	Pb-210 release rate from the drying/packaging facility stack (Ci/yr)
p	power for height ratio (unitless)
Q_{o_i}	initial amount of radionuclide *i* released (Ci/s)
Q_h	heat flux from radionuclide release area (cal/s)
Q_{xi}	depleted source strength of nuclide *i* at distance *x* (Ci)
q_h	horizontal flux of particulate material (g/m-s)
q_v	vertical flux (emission rate) of particulate material (g/m^2-s)
R	rainfall rate (mm/h)
$RA226_{dp}$	Ra-226 release rate from the drying/packaging facility stack (Ci/yr)
$Rn220_{nw}$	Rn-220 release rate from a new well field (Ci/yr)
$Rn222_{nw}$	Rn-222 release rate from a new well field (Ci/yr)
R_{yc}	daily production rate of yellowcake at the facility (kg U_3O_8/d)
s	stability parameter (unitless)
$TH230_{dp}$	Th-230 release rate from the drying/packaging facility stack (Ci/yr)
T_a	ambient air temperature (K)
t	time following release (s)
t_{pit}	storage time in a mud pit (d)
u_*	shear velocity (m/s)
u_{*t}	threshold shear velocity (m/s)
$U238_{dp}$	U-238 release rate from the drying/packaging facility stack (Ci/yr)
$U238_{sa}$	specific activity of U-238 ($3.3x10^{-7}$ Ci/g)
u_a	wind speed at measurement height (m/s)
u_H	average wind speed at the effective release height (m/s)
u_z	wind velocity at height *z* (m/s)
V_c	volume of water in circulation (L)

V_{dp}	deposition velocity for particle size *p* (m/s)
V_{ix}	volume content of the ion exchange column (L)
V_S	settling velocity (m/s)
V_W	washout coefficient (1/s)
v_{Rn}	rate of radon venting from piping and valves during circulation (1/d)
v_s	exit velocity of effluent from emission stack (m/s)
W	water content expressed in weight percent
W_c	washout coefficient (1/s)$(mm/h)^{-1}$
x	downwind receptor distance from release area (m)
y	crosswind distance from the plume centerline (m)
z	wind measurement height (m)
z_o	characteristic surface roughness height (g/m-s)
z_a	height of anemometer for wind speed measurement (m)
z_r	vertical distance above the release point (m)

APPENDIX B
CASE 1 USER FILE INPUT SUMMARY

MILDOS STANDARD RESULTS REPORT

Case Title: Case 1
Version: MILDOS 4.1
File: C:\mildos4\UserFiles\Case1_verify_4_1.mla
Date: 04/02/2019 13:22:26

Table of Contents

- **Input Listing**
  - Parameters
  - Receptors
  - Sources
  - Vegetable Ingestion Parameters
  - Population Ingestion Parameters
  - 80km Population
  - 80km Vegetation
  - 80km Meat
  - 80km Milk
  - Meteorological Joint Freq Data
  - Food Transfer Factors

Parameters

(Return to Table of Contents)

Name	Value	Description
ambientT	283	Ambient temperature (K)
amMix	400	Annual average morning mixing height (m)
anemHeight	10	Anemometer height (m)
caseFile	place holder	not used
caseInfo	Sample file	Additional user-specified information for the case under study
caseTitle	Case 1	User-defined title for case under study
cowIngestRate	50	Ingestion rate (feed wet weight) of animals (beef cattle and milk cows) (kg/d)
cutoffHeight	50	Height above which to use Briggs urban dispersion coefficients (m)
decayPlants	14	Weathering decay half-life for loss of contamination from vegetation due to weathering processes (days)
fracEdibleLeafAnimal	1	Fraction of radionuclides reaching the edible portion of animal-consumed vegetation (unitless)
fracEdibleLeafHuman	1	Fraction of radionuclides reaching the edible portion of human-consumed leafy vegetables (unitless)
fracEdibleRoot	0.1	Fraction of radionuclides reaching the edible portion of human-consumed root vegetables (unitless)

fracHayInd	0.5	Fraction of livestock feed from stored hay for individual consumption (unitless)
fracHayPop	0.5	Fraction of livestock feed from stored hay for consumption by the general population (unitless)
fracMeatPrep	1	Fraction of radioactivity in meat remaining after food preparation (unitless)
fracMilkPrep	1	Fraction of radioactivity in milk remaining after food preparation (unitless)
fracPastureInd	0.5	Fraction of livestock feed from pasture grass for individual consumption (unitless)
fracPasturePop	0.5	Fraction of livestock feed from pasture grass for consumption by the general population (unitless)
fracRetain	0.2	Fraction of air-deposited radionuclides retained on vegetation (unitless)
fracVegPrep	0.5	Fraction of radioactivity in vegetables remaining after food preparation (unitless)
gridSize	5	Size of grid blocks to use when calculating air concentrations (m)
isPopExposure	True	Option to perform population ingestion calculations; true (1) or false (0)
isPopIngest	TRUE	Option to perform population ingestion calculations; true (1) or false (0)
jfdNotes	Sample data	Stores user notes as needed
mapProj	Local Coordinates	Contains the current map projection being used for the map display; consists of a list of the UTM zone, the datum (WGS84 or NAD83), and the EPSG code for the projection (EPSG stands for what used to be the European Petroleum Survey Group)
mapState		String with serialized map state
maxDistCalcArea	1000	Maximum distance between an area source and receptor where the area source model will be used; the source will be treated as a point source beyond the specified distance (m)
meatProd	0	Farmland meat productivity (kg/yr)
metFreq	0	Frequency of time wind is blowing in a specific direction, under a specific stability category, at a given wind speed (unitless)
milkProd	0	Farmland milk productivity (kg/yr)
nPeople	0	Number of people in sector segment (persons)
partFrac	0	Fraction of particle size distribution for a given average particle size (unitless)
pmMix	1600	Annual afternoon mixing height (m)
rain	0	Rainfall rate (m/yr)
relRate	0	Nuclide release rate (Ci/yr)
resuspDepVel	0.01	Deposition velocity for particulates associated with the intial and final resuspension factors specified (m/s)
resuspFacFinal	1.00E-09	Final resuspension factor for determining resuspended air concentrations (1/m)
resuspFacInitial	1.00E-05	Initial resuspension factor for determining resuspended air concentrations (1/m)
resuspHalfLife	0.137	Resuspension factor decay half-life (yr)

soilArealDen	240	Areal surface density / effective surface soil density (kg/m^2)
soilConc	0	Nuclide soil concentration for area sources (pCi/g)
soilHalfLife	50	Environmental soil loss half-life (yr)
vegProd	0	Farmland vegetable productivity (kg/yr)
vGrow	60	Exposure time to radionuclides during the human-consumed vegetable growing season(d)
vGrowPasture	30	Exposure time to radionuclides during the animal-consumed vegetation growing season (d)
yieldMeat	3070	Farmland production rate of meat for population ingestion calculations (kg/km^2-yr)
yieldMilk	6710	Farmland production rate of milk for population ingestion calculations (kg/km^2-yr)
yieldVeg	55800	Farmland production rate of vegetation for population ingestion calculations (kg/km^2-yr)
yVeg	2	Yield density of human-consumed vegetation on farmland (kg/m^2)
yVegPasture	0.75	Yield density of animal-consumed vegetation on farmland (kg/m^2)
optOutTable	STD	Option that controls contents of the analysis output. STD - standard output only; STD_CUSTOM - standard and user specified custom output
optOutWho	1	Option that specifies what receptor type custom output to generate. 1 - individual receptors; 2 - population receptors; 3 - both individual and population receptors.

Receptors

(Return to Table of Contents)

Name	x (m)	y (m)	z (m)	Age Group	Indoor Occupancy Fraction	Outdoor Occupancy Fraction	Indoor External Shielding Factor	Indoor Inhalation Shielding Factor	Consider Vegetation Pathway?	Vegetation Ingestion Rate (kg/yr)	Consider Meat Pathway?	Meat Ingestion Rate (kg/yr)	Consider Milk Pathway?	Milk Ingestion Rate (kg/yr)	No.	Rn-222 Indoor Eq. Fraction	User Input Rn-222 Outdoor Eq. Frac.?	Rn-222 Outdoor Eq. Fraction
Fence Boundary E	1.60E+03	-2.00E+02	9.00E+00	Adult	5.83E-01	4.17E-01	7.00E-01	1.00E+00	False	1.05E+02	False	7.83E+01	False	1.30E+02	1	5.00E-01	True	7.00E-01
Fence Boundary SSE	1.08E+03	-1.60E+03	2.00E+00	Adult	5.83E-01	4.17E-01	7.00E-01	1.00E+00	False	1.05E+02	False	7.83E+01	False	1.30E+02	2	5.00E-01	False	7.00E-01
Grazing E	2.56E+03	0.00E+00	4.00E+00	Adult	5.83E-01	4.17E-01	7.00E-01	1.00E+00	True	1.05E+02	True	7.83E+01	True	1.30E+02	3	5.00E-01	False	7.00E-01
Grazing ESE	2.58E+03	-8.90E+02	-1.00E+00	Adult	5.83E-01	4.17E-01	7.00E-01	1.00E+00	True	1.05E+02	True	7.83E+01	True	1.30E+02	4	5.00E-01	True	7.00E-01
Nearest Resident NNW	-4.88E+02	1.47E+03	1.20E+01	Adult	5.83E-01	4.17E-01	7.00E-01	1.00E+00	True	1.05E+02	True	7.83E+01	True	1.30E+02	5	5.00E-01	False	7.00E-01
Nearest Resident NE	2.13E+03	2.17E+03	1.00E+01	Adult	5.83E-01	4.17E-01	7.00E-01	1.00E+00	True	1.05E+02	True	7.83E+01	True	1.30E+02	6	5.00E-01	False	7.00E-01

Sources

(Return to Table of Contents)

Name	Source Type	Release Type	Particle Distribution Set	x (m)	y (m)	z (m)	Dispersion Coefficients	No.
Yellowcake Stack	Drying/ Packaging	Point	1	0.00E+00	0.00E+00	2.00E+01	Pasquill-Gifford	1
Ore Pad	Area	Area	3	4.00E+02	4.00E+02	6.00E+00	Pasquill-Gifford	2
Grizzly Dump Hopper	Point	Point	2	2.00E+02	2.00E+02	0.00E+00	Pasquill-Gifford	3
Tailings Area 1	Area	Area	3	1.73E+02	8.17E+02	-1.00E+01	Pasquill-Gifford	4
Tailings Area 2	Area	Area	3	-1.56E+03	-1.10E+03	-1.00E+01	Pasquill-Gifford	5
Tailings Area 3	Area	Area	3	1.20E+03	-2.20E+03	-1.00E+01	Pasquill-Gifford	6

Source Release Terms Before Time Step Adjustment [Ci/y]

Source	Rn-222	U-238	Th-230	Ra-226	Pb-210	Rn-220	Th-232	Ra-228	Th-228
Yellowcake Stack	0.00E+00	7.15E-02	3.58E-04	3.58E-04	3.58E-04	0.00E+00	0.00E+00	0.00E+00	0.00E+00
Ore Pad	6.41E+02	3.91E-03	3.91E-03	3.91E-03	3.91E-03	1.69E+01	1.03E-04	1.03E-04	1.03E-04
Grizzly Dump Hopper	4.20E+01	2.60E-02	2.60E-02	2.60E-02	2.60E-02	1.50E+00	8.00E-04	8.00E-04	8.00E-04
Tailings Area 1	1.28E+03	3.13E-04	7.44E-03	7.81E-03	7.81E-03	3.61E+01	2.20E-04	2.20E-04	2.20E-04
Tailings Area 2	3.64E+03	8.89E-04	2.11E-02	2.22E-02	2.22E-02	1.11E+02	6.75E-04	6.75E-04	6.75E-04
Tailings Area 3	1.51E+04	3.68E-03	8.76E-02	9.20E-02	9.20E-02	4.24E+02	2.58E-03	2.58E-03	2.58E-03

Source Type Specific Parameters

Point Sources

Name	Source Type	Inside Stack Diameter (m)	Effluent Exit Velocity (m/s)	Rn-220 Release Rate	Rn-222 Release Rate	Momentum based rise?	Heat Release	Yellowcake Production Rate (kg/d)	Fraction Released to Stack	Th Fraction	Ra Fraction	Others Fraction	Water Rate	Column Volume	Column Empty / Exchange Rate	Resin Porosity	Well Field Source
Grizzly Dump Hopper	Point	1.5	0	1.5	42	True	0	N/A	N/A	N/A	N/A	N/A	N/A	N/A	N/A	N/A	N/A
Yellowcake Stack	Drying/ Packaging	1.2	14.2	N/A	N/A	True	0	700	0.001	0.005	0.005	0.005	N/A	N/A	N/A	N/A	N/A

Area Sources

Name	Source Type	Area	Area Option	Radius	Rectangle Length	Rectangle Width	Rect Rotate	Rn-220 Release Rate	Rn-222 Release Rate	Particulate Release Rate	PART_ RATE_ LAND	Erosion Option	Tailing Mass < 20 um (%)	Surface Roughness Height (m)	Particle Density (g/m^3)	Water Content (wt.%)
Ore Pad	Area	31415.9265358979	CIRC	100	N/A	N/A	N/A	17	647	0	N/A	True	3	0.1	2400000	0.1
Tailings Area 1	Area	142884	RECT	N/A	378	378	0	8	284.4	0	N/A	True	3	0.1	2400000	0.1
Tailings Area 2	Area	270400	RECT	N/A	520	520	0	13	427	0	N/A	True	3	0.1	2400000	0.1
Tailings Area 3	Area	840000	POLY	N/A	N/A	N/A	N/A	16	570	0	N/A	True	3	0.1	2400000	0.1

(Area Sources table continued)

Name	Saltating Particle Diameter (m)	Water Volume	Soil Density	Contamination Depth	Water Content	Ra-226 Concentration in Ore (pCi/g)	Rn-222 Emanation Fraction	Ore Thick	Ore Density	Circulating Water Volume (L)	Rn Fraction	Rn Vent	Operating Days	Storage Time in Pit (days)	Ore Material into Pit (g/yr)	Number of Mud Pits (1/yr)
Ore Pad	0.0003	N/A	N/A	N/A	N/A	N/A	N/A	N/A	N/A	N/A	N/A	N/A	N/A	N/A	N/A	N/A
Tailings Area 1	0.0003	N/A	N/A	N/A	N/A	N/A	N/A	N/A	N/A	N/A	N/A	N/A	N/A	N/A	N/A	N/A
Tailings Area 2	0.0003	N/A	N/A	N/A	N/A	N/A	N/A	N/A	N/A	N/A	N/A	N/A	N/A	N/A	N/A	N/A
Tailings Area 3	0.0003	N/A	N/A	N/A	N/A	N/A	N/A	N/A	N/A	N/A	N/A	N/A	N/A	N/A	N/A	N/A

Release Adjustments Over Time

Source	Particle Adjustment				Radon Adjustment			
Time step	Time 1	Time 2	Time 3	Time 4	Time 1	Time 2	Time 3	Time 4
Duration (years)	1	2	2	1	1	2	2	1
Yellowcake Stack	0	1	1	1	0	1	1	1
Ore Pad	1	1	1	0.1	1	1	1	0.1
Grizzly Dump Hopper	0.8	1	1	0.9	0.8	1	1	0.9
Tailings Area 1	0	1	1	1	0	1	1	1
Tailings Area 2	0	0	1	1	0	0	1	1
Tailings Area 3	0	0	1	1	0	0	1	1

Vegetable Ingestion Parameters

(Return to Table of Contents)

Vegetation Type	Infant Vegetable Ingestion Fraction	Child Vegetable Ingestion Fraction	Teenager Vegetable Ingestion Fraction	Adult Vegetable Ingestion Fraction	Population Vegetable Fraction
Above Ground	0.00E+00	3.60E-01	3.80E-01	3.80E-01	7.80E-01
Potatoes	0.00E+00	5.70E-01	5.50E-01	5.70E-01	2.00E-01
Below Ground	0.00E+00	7.00E-02	7.00E-02	5.00E-02	2.00E-02

Population Ingestion Parameters

(Return to Table of Contents)

Age Group	Fraction of Population	Vegetation Ingestion Rate (kg/yr)	Meat Ingestion Rate (kg/yr)	Milk Ingestion Rate (kg/yr)
Infant	1.79E-02	0.00E+00	0.00E+00	2.08E+02
Child	1.65E-01	2.38E+02	4.87E+01	2.35E+02
Teenager	1.96E-01	3.07E+02	7.80E+01	2.91E+02
Adult	6.22E-01	2.86E+02	1.28E+02	1.76E+02

80km Population

(Return to Table of Contents)

Direction	1-2 km	2-3 km	3-4 km	4-5 km	5-10 km	10-20 km	20-30 km	30-40 km	40-50 km	50-60 km	60-70 km	70-80 km
N	1	2	3	4	5	6	7	8	9	10	11	12
NNE	0	286	1603	1288	221	4073	6789	9505	12220	14591	15101	15552
NE	0	1288	1402	258	779	4073	6789	9505	12220	13210	12551	14482
ENE	0	1431	1202	1545	221	883	1472	3921	8870	14092	15611	16542
E	0	1431	2003	258	221	883	1472	2060	2649	3238	5900	8403
ESE	572	1431	2003	773	221	883	1472	2060	2649	3238	3826	4415
SE	572	143	21	26	221	883	1472	2060	2707	3677	4761	6404
SSE	916	215	21	26	221	883	1472	2060	3296	4995	5904	6812
S	286	143	200	26	221	883	1472	2060	2721	4995	5904	6812
SSW	12	15	21	26	221	883	2068	3870	3656	4995	5904	6812
SW	12	15	21	26	221	1360	3460	4844	6143	6304	6368	6812
WSW	12	15	21	26	370	2076	3460	4844	4789	4665	4838	5162
W	114	15	21	26	519	2076	3460	4844	2809	3214	3798	4382
WNW	114	15	21	26	519	2009	2904	3677	4427	4092	3798	4382
NW	229	15	21	44	519	1476	2348	3287	4226	5166	5841	6384
NNW	12	11	10	9	8	7	6	5	4	3	2	1

80km Vegetation (kg/yr)

(Return to Table of Contents)

Direction	1-2 km	2-3 km	3-4 km	4-5 km	5-10 km	10-20 km	20-30 km	30-40 km	40-50 km	50-60 km	60-70 km	70-80 km
N	0.00E+00	0.00E+00	0.00E+00	0.00E+00	0.00E+00	0.00E+00	3.90E+05	1.10E+06	1.70E+06	2.50E+06	4.20E+04	1.20E+05
NNE	0.00E+00	0.00E+00	0.00E+00	0.00E+00	0.00E+00	6.90E+02	4.50E+05	8.70E+05	1.40E+06	2.30E+06	3.50E+05	3.90E+05
NE	0.00E+00	0.00E+00	0.00E+00	0.00E+00	0.00E+00	3.30E+07	4.80E+05	7.90E+05	1.20E+06	1.20E+06	0.00E+00	8.30E+04
ENE	0.00E+00	0.00E+00	0.00E+00	0.00E+00	0.00E+00	4.40E+04	4.70E+05	7.90E+05	1.00E+06	8.80E+05	0.00E+00	1.00E+05
E	0.00E+00	0.00E+00	0.00E+00	0.00E+00	0.00E+00	1.10E+05	4.50E+04	2.70E+05	4.40E+05	3.90E+05	0.00E+00	9.10E+01
ESE	0.00E+00	0.00E+00	0.00E+00	0.00E+00	0.00E+00	1.20E+05	2.80E+05	1.10E+03	2.30E+02	1.30E+03	1.20E+02	7.00E+02
SE	0.00E+00	0.00E+00	0.00E+00	0.00E+00	0.00E+00	1.20E+05	5.30E+05	2.80E+06	6.60E+06	2.20E+06	2.20E+02	3.30E+02
SSE	0.00E+00	0.00E+00	0.00E+00	0.00E+00	0.00E+00	1.10E+05	5.80E+05	2.80E+06	1.20E+07	1.40E+07	0.00E+00	1.00E+05
S	0.00E+00	0.00E+00	0.00E+00	0.00E+00	0.00E+00	9.00E+04	5.80E+05	9.70E+05	5.10E+06	4.80E+06	3.20E+05	1.10E+05
SSW	0.00E+00	0.00E+00	0.00E+00	0.00E+00	0.00E+00	4.90E+04	5.80E+05	9.70E+05	1.00E+06	7.40E+05	5.90E+05	6.40E+05
SW	0.00E+00	0.00E+00	0.00E+00	0.00E+00	0.00E+00	3.90E+03	5.30E+05	8.90E+05	1.00E+06	7.50E+05	1.70E+05	2.90E+01
WSW	0.00E+00	0.00E+00	0.00E+00	0.00E+00	0.00E+00	0.00E+00	2.50E+05	4.90E+05	8.50E+05	1.10E+06	0.00E+00	1.00E+05
W	0.00E+00	0.00E+00	0.00E+00	0.00E+00	0.00E+00	0.00E+00	2.60E+05	3.40E+05	1.60E+05	7.00E+05	1.60E+02	1.20E+02
WNW	0.00E+00	0.00E+00	0.00E+00	0.00E+00	0.00E+00	0.00E+00	2.40E+05	4.00E+05	1.80E+05	5.60E+04	5.00E+02	6.30E+02
NW	0.00E+00	0.00E+00	0.00E+00	0.00E+00	0.00E+00	0.00E+00	4.30E+06	3.10E+05	3.70E+05	3.10E+05	7.10E+01	4.00E+02
NNW	0.00E+00	0.00E+00	0.00E+00	0.00E+00	0.00E+00	0.00E+00	2.60E+06	2.00E+06	1.10E+06	1.00E+06	1.20E+02	0.00E+00

80km Meat (kg/yr)

(Return to Table of Contents)

Direction	1-2 km	2-3 km	3-4 km	4-5 km	5-10 km	10-20 km	20-30 km	30-40 km	40-50 km	50-60 km	60-70 km	70-80 km
N	0.00E+00	0.00E+00	0.00E+00	0.00E+00	0.00E+00	0.00E+00	1.80E+06	3.10E+06	4.10E+06	6.30E+06	0.00E+00	1.00E+05
NNE	0.00E+00	0.00E+00	0.00E+00	0.00E+00	0.00E+00	3.10E+03	2.10E+06	3.40E+06	4.30E+06	6.70E+06	0.00E+00	1.00E+05
NE	0.00E+00	0.00E+00	0.00E+00	0.00E+00	0.00E+00	9.70E+07	2.20E+06	3.60E+06	4.80E+06	5.80E+06	6.50E+05	7.60E+05
ENE	0.00E+00	0.00E+00	0.00E+00	0.00E+00	0.00E+00	1.10E+05	2.10E+06	3.60E+06	5.30E+06	8.00E+06	7.90E+06	8.10E+06
E	0.00E+00	0.00E+00	0.00E+00	0.00E+00	0.00E+00	1.80E+05	2.30E+05	1.30E+06	3.40E+06	4.40E+06	3.80E+06	2.90E+06
ESE	0.00E+00	0.00E+00	0.00E+00	0.00E+00	0.00E+00	1.90E+05	5.00E+05	1.10E+05	5.40E+04	3.20E+05	2.00E+06	4.40E+06
SE	0.00E+00	0.00E+00	0.00E+00	0.00E+00	0.00E+00	2.00E+05	8.80E+05	8.20E+05	4.00E+05	1.40E+05	1.80E+06	3.50E+06
SSE	0.00E+00	0.00E+00	0.00E+00	0.00E+00	0.00E+00	1.90E+05	9.60E+05	1.30E+06	7.30E+05	1.20E+06	4.70E+04	1.20E+06
S	0.00E+00	0.00E+00	0.00E+00	0.00E+00	0.00E+00	1.50E+05	9.60E+05	1.60E+06	1.70E+06	2.40E+06	1.10E+06	7.90E+05
SSW	0.00E+00	0.00E+00	0.00E+00	0.00E+00	0.00E+00	8.10E+04	9.60E+05	1.60E+06	2.50E+06	3.80E+06	2.00E+06	3.30E+06
SW	0.00E+00	0.00E+00	0.00E+00	0.00E+00	0.00E+00	6.30E+03	1.20E+06	2.60E+06	4.20E+06	5.10E+06	1.90E+06	7.40E+06
WSW	0.00E+00	0.00E+00	0.00E+00	0.00E+00	0.00E+00	0.00E+00	3.40E+06	6.30E+06	7.80E+06	9.90E+06	3.90E+05	9.70E+06
W	0.00E+00	0.00E+00	0.00E+00	0.00E+00	0.00E+00	0.00E+00	3.60E+06	6.30E+06	7.90E+06	1.00E+07	1.70E+06	1.80E+06
WNW	0.00E+00	0.00E+00	0.00E+00	0.00E+00	0.00E+00	0.00E+00	3.30E+06	6.60E+06	8.40E+06	5.30E+06	4.60E+06	5.60E+06
NW	0.00E+00	0.00E+00	0.00E+00	0.00E+00	0.00E+00	0.00E+00	6.40E+07	6.80E+06	8.80E+06	9.20E+06	4.20E+06	5.70E+06
NNW	0.00E+00	0.00E+00	0.00E+00	0.00E+00	0.00E+00	0.00E+00	3.80E+07	3.00E+07	6.70E+06	7.80E+06	2.60E+06	1.60E+06

80km Milk (kg/yr)

(Return to Table of Contents)

Direction	1-2 km	2-3 km	3-4 km	4-5 km	5-10 km	10-20 km	20-30 km	30-40 km	40-50 km	50-60 km	60-70 km	70-80 km
N	0.00E+00	0.00E+00	0.00E+00	0.00E+00	0.00E+00	0.00E+00	0.00E+00	0.00E+00	0.00E+00	1.00E+05	0.00E+00	9.10E+01
NNE	0.00E+00	0.00E+00	0.00E+00	0.00E+00	0.00E+00	0.00E+00	0.00E+00	0.00E+00	0.00E+00	1.00E+05	1.20E+02	7.00E+02
NE	0.00E+00	0.00E+00	0.00E+00	0.00E+00	0.00E+00	3.40E+05	0.00E+00	0.00E+00	0.00E+00	1.10E+03	2.20E+02	3.30E+02
ENE	0.00E+00	0.00E+00	0.00E+00	0.00E+00	0.00E+00	3.70E+02	3.30E+01	0.00E+00	1.60E+03	8.80E+03	0.00E+00	1.00E+05
E	0.00E+00	0.00E+00	0.00E+00	0.00E+00	0.00E+00	1.30E+03	1.30E+02	0.00E+00	2.80E+03	4.10E+03	3.20E+05	1.10E+05
ESE	0.00E+00	0.00E+00	0.00E+00	0.00E+00	0.00E+00	1.40E+03	3.40E+03	0.00E+00	0.00E+00	0.00E+00	5.90E+05	6.40E+05
SE	0.00E+00	0.00E+00	0.00E+00	0.00E+00	0.00E+00	1.40E+03	6.30E+03	4.70E+03	0.00E+00	0.00E+00	1.70E+05	2.90E+01
SSE	0.00E+00	0.00E+00	0.00E+00	0.00E+00	0.00E+00	1.30E+03	6.90E+03	8.70E+03	8.60E+00	2.40E+03	0.00E+00	1.00E+05
S	0.00E+00	0.00E+00	0.00E+00	0.00E+00	0.00E+00	1.10E+03	6.90E+03	1.20E+04	1.10E+04	4.80E+04	1.60E+02	1.20E+02
SSW	0.00E+00	0.00E+00	0.00E+00	0.00E+00	0.00E+00	5.90E+02	6.90E+03	1.20E+04	3.10E+05	9.60E+05	5.00E+02	6.30E+02
SW	0.00E+00	0.00E+00	0.00E+00	0.00E+00	0.00E+00	4.60E+01	6.00E+03	3.10E+04	2.50E+05	7.70E+05	7.10E+01	4.00E+02
WSW	0.00E+00	0.00E+00	0.00E+00	0.00E+00	0.00E+00	0.00E+00	7.60E+00	3.20E+04	1.60E+05	2.10E+05	1.20E+02	0.00E+00
W	0.00E+00	0.00E+00	0.00E+00	0.00E+00	0.00E+00	0.00E+00	0.00E+00	0.00E+00	2.30E+04	1.30E+05	2.00E+06	3.30E+06
WNW	0.00E+00	0.00E+00	0.00E+00	0.00E+00	0.00E+00	0.00E+00	0.00E+00	0.00E+00	0.00E+00	1.00E+05	1.90E+06	7.40E+06
NW	0.00E+00	0.00E+00	0.00E+00	0.00E+00	0.00E+00	0.00E+00	0.00E+00	0.00E+00	0.00E+00	1.00E+05	3.90E+05	9.70E+06
NNW	0.00E+00	0.00E+00	0.00E+00	0.00E+00	0.00E+00	0.00E+00	0.00E+00	0.00E+00	0.00E+00	1.00E+05	1.70E+06	1.80E+06

Met JFD

(Return to Table of Contents)

Direction	Stability Class	0.67 m/s	2.46 m/s	4.47 m/s	6.93 m/s	9.61 m/s	12.5 m/s
N	A	0.00019	0.00005	0.00000	0.00000	0.00000	0.00000
NNE	A	0.00035	0.00008	0.00000	0.00000	0.00000	0.00000
NE	A	0.00036	0.00012	0.00000	0.00000	0.00000	0.00000
ENE	A	0.00016	0.00002	0.00000	0.00000	0.00000	0.00000
E	A	0.00030	0.00007	0.00000	0.00000	0.00000	0.00000
ESE	A	0.00155	0.00025	0.00000	0.00000	0.00000	0.00000
SE	A	0.00121	0.00027	0.00000	0.00000	0.00000	0.00000
SSE	A	0.00083	0.00022	0.00000	0.00000	0.00000	0.00000
S	A	0.00159	0.00032	0.00000	0.00000	0.00000	0.00000
SSW	A	0.00035	0.00013	0.00000	0.00000	0.00000	0.00000
SW	A	0.00194	0.00035	0.00000	0.00000	0.00000	0.00000
WSW	A	0.00078	0.00020	0.00000	0.00000	0.00000	0.00000
W	A	0.00066	0.00008	0.00000	0.00000	0.00000	0.00000
WNW	A	0.00082	0.00010	0.00000	0.00000	0.00000	0.00000
NW	A	0.00070	0.00017	0.00000	0.00000	0.00000	0.00000
NNW	A	0.00040	0.00003	0.00000	0.00000	0.00000	0.00000
N	B	0.00355	0.00088	0.00035	0.00000	0.00000	0.00000
NNE	B	0.00430	0.00123	0.00047	0.00000	0.00000	0.00000
NE	B	0.00411	0.00185	0.00066	0.00000	0.00000	0.00000
ENE	B	0.00136	0.00054	0.00032	0.00000	0.00000	0.00000
E	B	0.00140	0.00054	0.00022	0.00000	0.00000	0.00000
ESE	B	0.00090	0.00056	0.00093	0.00000	0.00000	0.00000
SE	B	0.00338	0.00249	0.00348	0.00000	0.00000	0.00000
SSE	B	0.00208	0.00165	0.00249	0.00000	0.00000	0.00000
S	B	0.00165	0.00067	0.00143	0.00000	0.00000	0.00000
SSW	B	0.00204	0.00106	0.00089	0.00000	0.00000	0.00000
SW	B	0.00276	0.00084	0.00101	0.00000	0.00000	0.00000
WSW	B	0.00365	0.00109	0.00136	0.00000	0.00000	0.00000
W	B	0.00417	0.00128	0.00118	0.00000	0.00000	0.00000
WNW	B	0.00352	0.00056	0.00180	0.00000	0.00000	0.00000
NW	B	0.00225	0.00104	0.00089	0.00000	0.00000	0.00000
NNW	B	0.00313	0.00094	0.00071	0.00000	0.00000	0.00000
N	C	0.00065	0.00189	0.00197	0.00008	0.00000	0.00000
NNE	C	0.00063	0.00180	0.00264	0.00040	0.00005	0.00000
NE	C	0.00058	0.00192	0.00251	0.00056	0.00005	0.00002
ENE	C	0.00021	0.00045	0.00050	0.00005	0.00000	0.00000
E	C	0.00023	0.00029	0.00019	0.00013	0.00000	0.00000
ESE	C	0.00027	0.00056	0.00163	0.00042	0.00000	0.00000
SE	C	0.00085	0.00345	0.01353	0.00348	0.00022	0.00002

SSE	C	0.00049	0.00219	0.00889	0.00305	0.00045	0.00012
S	C	0.00040	0.00098	0.00300	0.00202	0.00064	0.00039
SSW	C	0.00033	0.00088	0.00209	0.00254	0.00088	0.00039
SW	C	0.00048	0.00099	0.00296	0.00261	0.00084	0.00020
WSW	C	0.00095	0.00244	0.00284	0.00190	0.00064	0.00013
W	C	0.00171	0.00572	0.00545	0.00163	0.00007	0.00005
WNW	C	0.00127	0.00288	0.00623	0.00153	0.00045	0.00000
NW	C	0.00073	0.00150	0.00498	0.00200	0.00032	0.00008
NNW	C	0.00057	0.00197	0.00274	0.00067	0.00002	0.00002
N	D	0.00094	0.00178	0.00266	0.00412	0.00077	0.00003
NNE	D	0.00071	0.00145	0.00261	0.00534	0.00061	0.00019
NE	D	0.00071	0.00153	0.00379	0.00481	0.00044	0.00002
ENE	D	0.00073	0.00093	0.00077	0.00029	0.00000	0.00000
E	D	0.00057	0.00076	0.00047	0.00008	0.00000	0.00000
ESE	D	0.00073	0.00118	0.00103	0.00120	0.00008	0.00000
SE	D	0.00223	0.00441	0.01294	0.01432	0.00059	0.00002
SSE	D	0.00208	0.00397	0.00894	0.01158	0.00148	0.00039
S	D	0.00074	0.00133	0.00298	0.00668	0.00288	0.00118
SSW	D	0.00053	0.00084	0.00221	0.00944	0.00353	0.00150
SW	D	0.00075	0.00143	0.00330	0.01227	0.00569	0.00173
WSW	D	0.00136	0.00274	0.00311	0.01032	0.00328	0.00101
W	D	0.00233	0.00522	0.00761	0.00963	0.00170	0.00035
WNW	D	0.00144	0.00325	0.00850	0.02129	0.00630	0.00098
NW	D	0.00120	0.00274	0.00901	0.02629	0.00677	0.00081
NNW	D	0.00105	0.00217	0.00454	0.00768	0.00104	0.00013
N	E	0.00000	0.00108	0.00421	0.00000	0.00000	0.00000
NNE	E	0.00000	0.00098	0.00261	0.00000	0.00000	0.00000
NE	E	0.00000	0.00044	0.00118	0.00000	0.00000	0.00000
ENE	E	0.00000	0.00040	0.00024	0.00000	0.00000	0.00000
E	E	0.00000	0.00015	0.00002	0.00000	0.00000	0.00000
ESE	E	0.00000	0.00015	0.00042	0.00000	0.00000	0.00000
SE	E	0.00000	0.00091	0.00468	0.00000	0.00000	0.00000
SSE	E	0.00000	0.00089	0.00643	0.00000	0.00000	0.00000
S	E	0.00000	0.00103	0.00323	0.00000	0.00000	0.00000
SSW	E	0.00000	0.00086	0.00350	0.00000	0.00000	0.00000
SW	E	0.00000	0.00108	0.00446	0.00000	0.00000	0.00000
WSW	E	0.00000	0.00374	0.01273	0.00000	0.00000	0.00000
W	E	0.00000	0.00520	0.05597	0.00000	0.00000	0.00000
WNW	E	0.00000	0.00224	0.01847	0.00000	0.00000	0.00000
NW	E	0.00000	0.00185	0.01606	0.00000	0.00000	0.00000
NNW	E	0.00000	0.00153	0.00874	0.00000	0.00000	0.00000
N	F	0.00392	0.00458	0.00000	0.00000	0.00000	0.00000

NNE	F	0.00360	0.00300	0.00000	0.00000	0.00000	0.00000
NE	F	0.00241	0.00202	0.00000	0.00000	0.00000	0.00000
ENE	F	0.00111	0.00099	0.00000	0.00000	0.00000	0.00000
E	F	0.00036	0.00029	0.00000	0.00000	0.00000	0.00000
ESE	F	0.00045	0.00025	0.00000	0.00000	0.00000	0.00000
SE	F	0.00184	0.00232	0.00000	0.00000	0.00000	0.00000
SSE	F	0.00291	0.00387	0.00000	0.00000	0.00000	0.00000
S	F	0.00345	0.00352	0.00000	0.00000	0.00000	0.00000
SSW	F	0.00472	0.00372	0.00000	0.00000	0.00000	0.00000
SW	F	0.01120	0.01106	0.00000	0.00000	0.00000	0.00000
WSW	F	0.03006	0.04124	0.00000	0.00000	0.00000	0.00000
W	F	0.03300	0.05573	0.00000	0.00000	0.00000	0.00000
WNW	F	0.01247	0.01655	0.00000	0.00000	0.00000	0.00000
NW	F	0.00809	0.00949	0.00000	0.00000	0.00000	0.00000
NNW	F	0.00643	0.00685	0.00000	0.00000	0.00000	0.00000

Food Transfer Factors

(Return to Table of Contents)

FOOD_TYPE	U	Th	Ra	Pb	Comments
Soil to Above Ground Vegetables	2.50E-03	4.20E-03	1.40E-02	4.00E-03	(pCi/kg plant - wet weight)/(pCi/kg soil - dry weight)
Soil to Potatoes	2.50E-03	4.20E-03	3.00E-03	4.00E-03	(pCi/kg plant - wet weight)/(pCi/kg soil - dry weight)
Soil to Below Ground Vegetables	2.50E-03	4.20E-03	1.40E-02	4.00E-03	(pCi/kg plant - wet weight)/(pCi/kg soil - dry weight)
Soil to Pasture Grass	2.50E-03	4.20E-03	1.80E-02	2.80E-02	(pCi/kg plant - wet weight)/(pCi/kg soil - dry weight)
Soil to Stored Animal Feed	2.50E-03	4.20E-03	8.20E-02	3.60E-02	(pCi/kg plant - wet weight)/(pCi/kg soil - dry weight)
Animal Feed to Meat	3.40E-04	2.00E-04	5.10E-04	7.10E-04	(pCi/kg per pCi/day)
Animal Feed to Milk	6.10E-04	5.00E-06	5.90E-04	1.20E-04	(pCi/L per pCi/day)

APPENDIX C
CASE 2 USER FILE INPUT SUMMARY

MILDOS STANDARD RESULTS REPORT

Case Title: Case 2
Version: MILDOS 4.1
File: C:\mildos4\UserFiles\Case2_verify_4_1.mla
Date: 04/02/2019 16:59:37

Table of Contents

- **Input Listing**
  - Parameters
  - Receptors
  - Sources
  - Vegetable Ingestion Parameters
  - Meteorological Joint Freq Data
  - Food Transfer Factors

Parameters

(Return to Table of Contents)

Name	Value	Description
ambientT	283	Ambient temperature (K)
amMix	400	Annual average morning mixing height (m)
anemHeight	10	Anemometer height (m)
caseFile	place holder	not used
caseInfo	ISR facility sample file	Additional user-specified information for the case under study
caseTitle	Case 2	User-defined title for case under study
cowIngestRate	50	Ingestion rate (feed wet weight) of animals (beef cattle and milk cows) (kg/d)
cutoffHeight	50	Height above which to use Briggs urban dispersion coefficients (m)
decayPlants	14	Weathering decay half-life for loss of contamination from vegetation due to weathering processes (days)
fracEdibleLeafAnimal	1	Fraction of radionuclides reaching the edible portion of animal-consumed vegetation (unitless)
fracEdibleLeafHuman	1	Fraction of radionuclides reaching the edible portion of human-consumed leafy vegetables (unitless)
fracEdibleRoot	0.1	Fraction of radionuclides reaching the edible portion of human-consumed root vegetables (unitless)
fracHayInd	0.5	Fraction of livestock feed from stored hay for individual consumption (unitless)
fracHayPop	0.5	Fraction of livestock feed from stored hay for consumption by the general population (unitless)

fracMeatPrep	1	Fraction of radioactivity in meat remaining after food preparation (unitless)
fracMilkPrep	1	Fraction of radioactivity in milk remaining after food preparation (unitless)
fracPastureInd	0.5	Fraction of livestock feed from pasture grass for individual consumption (unitless)
fracPasturePop	0.5	Fraction of livestock feed from pasture grass for consumption by the general population (unitless)
fracRetain	0.2	Fraction of air-deposited radionuclides retained on vegetation (unitless)
fracVegPrep	0.5	Fraction of radioactivity in vegetables remaining after food preparation (unitless)
gridSize	5	Size of grid blocks to use when calculating air concentrations (m)
isPopExposure	False	Option to perform population ingestion calculations; true (1) or false (0)
isPopIngest	TRUE	Option to perform population ingestion calculations; true (1) or false (0)
jfdNotes	From ISH data	Stores user notes as needed
mapProj	Local Coordinates	Contains the current map projection being used for the map display; consists of a list of the UTM zone, the datum (WGS84 or NAD83), and the EPSG code for the projection (EPSG stands for what used to be the European Petroleum Survey Group)
mapState		String with serialized map state
maxDistCalcArea	1000	Maximum distance between an area source and receptor where the area source model will be used; the source will be treated as a point source beyond the specified distance (m)
meatProd	0	Farmland meat productivity (kg/yr)
metFreq	0	Frequency of time wind is blowing in a specific direction, under a specific stability category, at a given wind speed (unitless)
milkProd	0	Farmland milk productivity (kg/yr)
nPeople	0	Number of people in sector segment (persons)
partFrac	0	Fraction of particle size distribution for a given average particle size (unitless)
pmMix	1600	Annual afternoon mixing height (m)
rain	0	Rainfall rate (m/yr)
relRate	0	Nuclide release rate (Ci/yr)
resuspDepVel	0.01	Deposition velocity for particulates associated with the intial and final resuspension factors specified (m/s)
resuspFacFinal	1.00E-09	Final resuspension factor for determining resuspended air concentrations (1/m)
resuspFacInitial	1.00E-05	Initial resuspension factor for determining resuspended air concentrations (1/m)
resuspHalfLife	0.137	Resuspension factor decay half-life (yr)
soilArealDen	240	Areal surface density / effective surface soil density (kg/m^2)
soilConc	0	Nuclide soil concentration for area sources (pCi/g)
soilHalfLife	50	Environmental soil loss half-life (yr)

vegProd	0	Farmland vegetable productivity (kg/yr)
vGrow	60	Exposure time to radionuclides during the human-consumed vegetable growing season(d)
vGrowPasture	30	Exposure time to radionuclides during the animal-consumed vegetation growing season (d)
yieldMeat	3070	Farmland production rate of meat for population ingestion calculations (kg/km^2-yr)
yieldMilk	6710	Farmland production rate of milk for population ingestion calculations (kg/km^2-yr)
yieldVeg	55800	Farmland production rate of vegetation for population ingestion calculations (kg/km^2-yr)
yVeg	2	Yield density of human-consumed vegetation on farmland (kg/m^2)
yVegPasture	0.75	Yield density of animal-consumed vegetation on farmland (kg/m^2)
optOutTable	STD	Option that controls contents of the analysis output. STD - standard output only; STD_CUSTOM - standard and user specified custom output
optOutWho	1	Option that specifies what receptor type custom output to generate. 1 - individual receptors; 2 - population receptors; 3 - both individual and population receptors.

Receptors

(Return to Table of Contents)

Name	x (m)	y (m)	z (m)	Age Group	Indoor Occupancy Fraction	Outdoor Occupancy Fraction	Indoor External Shielding Factor	Indoor Inhalation Shielding Factor	Consider Vegetation Pathway?	Vegetation Ingestion Rate (kg/yr)	Consider Meat Pathway?	Meat Ingestion Rate (kg/yr)	Consider Milk Pathway?	Milk Ingestion Rate (kg/yr)	No.	Rn-222 Indoor Eq. Fraction	User Input Rn-222 Outdoor Eq. Frac.?	Rn-222 Outdoor Eq. Fraction
North Fenceline	0.00E+00	9.00E+02	1.00E+01	Adult	0.00E+00	2.30E-01	7.00E-01	1.00E+00	False	1.05E+02	False	7.83E+01	False	1.30E+02	1	5.00E-01	False	7.00E-01
East Fence Line	1.73E+03	0.00E+00	2.00E+00	Adult	0.00E+00	2.30E-01	7.00E-01	1.00E+00	False	1.05E+02	False	7.83E+01	False	1.30E+02	2	5.00E-01	False	7.00E-01
South Fence Line	0.00E+00	-1.68E+03	-7.00E+00	Adult	0.00E+00	2.30E-01	7.00E-01	1.00E+00	False	1.05E+02	False	7.83E+01	False	1.30E+02	3	5.00E-01	True	7.00E-01
West Fence Line	-1.24E+03	0.00E+00	3.00E+00	Adult	0.00E+00	2.30E-01	7.00E-01	1.00E+00	False	1.05E+02	False	7.83E+01	False	1.30E+02	4	5.00E-01	False	7.00E-01
Nearest Resident	2.11E+03	1.81E+03	1.40E+01	Adult	5.83E-01	4.16E-01	7.00E-01	1.00E+00	True	1.05E+02	True	7.83E+01	True	1.30E+02	5	5.00E-01	False	7.00E-01

Sources

(Return to Table of Contents)

Name	Source Type	Release Type	Particle Distribution Set	x (m)	y (m)	z (m)	Dispersion Coefficients	No.
Dryer stack	Drying/ Packaging	Point	1	0.00E+00	0.00E+00	1.50E+01	Pasquill-Gifford	1
New Well Field	New Well Field	Area	1	7.00E+02	-5.00E+01	0.00E+00	Pasquill-Gifford	2
Production Well Field	Well Field	Area	1	7.00E+02	-5.00E+01	0.00E+00	Pasquill-Gifford	3
Production Well Field - purge	ISR Purge	Point	1	7.00E+02	-5.00E+01	0.00E+00	Pasquill-Gifford	4
Production Well Field - IX	ISR Ion Exchange	Point	1	7.00E+02	-5.00E+01	0.00E+00	Pasquill-Gifford	5
Restoration Well Field	Well Field	Area	1	7.00E+02	-5.00E+01	0.00E+00	Pasquill-Gifford	6
Restoration Well Field - purge	ISR Purge	Point	1	7.00E+02	-5.00E+01	0.00E+00	Pasquill-Gifford	7
Land Application Area	Land Application	Area	1	-7.23E+02	-2.75E+02	0.00E+00	Pasquill-Gifford	8

Source Release Terms Before Time Step Adjustment [Ci/y]

Source	Rn-222	U-238	Th-230	Ra-226	Pb-210	Rn-220	Th-232	Ra-228	Th-228
Dryer stack	0.00E+00	5.31E-02	2.66E-04	2.66E-04	2.66E-04	0.00E+00	0.00E+00	0.00E+00	0.00E+00
New Well Field	2.71E-02	0.00E+00	0.00E+00	0.00E+00	0.00E+00	3.22E+00	0.00E+00	0.00E+00	0.00E+00
Production Well Field	6.54E+01	0.00E+00	0.00E+00	0.00E+00	0.00E+00	1.43E+00	0.00E+00	0.00E+00	0.00E+00
Production Well Field - purge	6.54E+02	0.00E+00	0.00E+00	0.00E+00	0.00E+00	1.43E+01	0.00E+00	0.00E+00	0.00E+00
Production Well Field - IX	3.73E+02	0.00E+00	0.00E+00	0.00E+00	0.00E+00	8.16E+00	0.00E+00	0.00E+00	0.00E+00
Restoration Well Field	7.07E+01	0.00E+00	0.00E+00	0.00E+00	0.00E+00	1.49E+00	0.00E+00	0.00E+00	0.00E+00
Restoration Well Field - purge	6.12E+02	0.00E+00	0.00E+00	0.00E+00	0.00E+00	1.29E+01	0.00E+00	0.00E+00	0.00E+00
Land Application Area	0.00E+00	3.30E-05	1.38E-07	8.26E-07	8.26E-07	0.00E+00	2.75E-09	1.38E-07	1.38E-07

Source Type Specific Parameters

Point Sources

Name	Source Type	Inside Stack Diameter (m)	Effluent Exit Velocity (m/s)	Rn-220 Release Rate	Rn-222 Release Rate	Momentum based rise?	Heat Release	Yellowcake Production Rate (kg/d)	Fraction Released to Stack	Th Fraction	Ra Fraction	Others Fraction	Water Rate	Column Volume	Column Empty / Exchange Rate	Resin Porosity	Well Field Source
Dryer stack	Drying/ Packaging	1.1	2.5	N/A	N/A	True	0	520	0.001	0.005	0.005	0.005	N/A	N/A	N/A	N/A	N/A
Restoration Well Field - purge	ISR Purge	1.5	2	N/A	N/A	True	0	N/A	N/A	N/A	N/A	N/A	16000	N/A	N/A	N/A	Restoration Well Field
Production Well Field - purge	ISR Purge	1.5	2	N/A	N/A	True	0	N/A	N/A	N/A	N/A	N/A	18500	N/A	N/A	N/A	Production Well Field
Production Well Field - IX	ISR Ion Exchange	1.5	2	N/A	N/A	True	0	N/A	N/A	N/A	N/A	N/A	N/A	13200	2	0.4	Production Well Field

Area Sources

Name	Source Type	Area	Area Option	Radius	Rectangle Length	Rectangle Width	Rect Rotate	Rn-220 Release Rate	Rn-222 Release Rate	Particulate Release Rate	PART_RATE_ LAND	Erosion Option	Tailing Mass < 20 um (%)	Surface Roughness Height (m)	Particle Density (g/m^3)	Water Content (wt.%)
Land Application Area	Land Application	250000	RECT	N/A	500	500	0	N/A	N/A	N/A	N/A	True	3	0.1	2400000	0.1
New Well Field	New Well Field	100	RECT	N/A	10	10	0	N/A	N/A	N/A	N/A	N/A	N/A	N/A	N/A	N/A
Restoration Well Field	Well Field	270000	CIRC	293.161507141752	N/A	N/A	N/A	N/A	N/A	N/A	N/A	N/A	N/A	N/A	N/A	N/A
Production Well Field	Well Field	270000	CIRC	293.161507141752	N/A	N/A	N/A	N/A	N/A	N/A	N/A	N/A	N/A	N/A	N/A	N/A

(Area Sources table continued)

Name	Saltating Particle Diameter (m)	Water Volume	Soil Density	Contamination Depth	Water Content	Ra-226 Concentration in Ore (pCi/g)	Rn-222 Emanation Fraction	Ra-224 Concentration in Ore (pCi/g)	Rn-220 Emanation Fraction	Ore Thick	Ore Density	Circulating Water Volume (L)	Rn Fraction	Rn Vent	Operating Days	Storage Time in Pit (days)	Ore Material into Pit (g/yr)	Number of Mud Pits (1/yr)
Land Application Area	0.0003	N/A	1.6	0.15	0.25	N/A	N/A	N/A	N/A	N/A	N/A	N/A	N/A	N/A	N/A	N/A	N/A	N/A
New Well Field	N/A	N/A	N/A	N/A	N/A	300	0.25	10	0.15	N/A	N/A	N/A	N/A	N/A	N/A	10	4750000	42
Restoration Well Field	N/A	N/A	N/A	N/A	N/A	300	0.25	10	0.15	7	1.8	1850000	0.8	0.001	N/A	N/A	N/A	N/A
Production Well Field	N/A	N/A	N/A	N/A	N/A	300	0.25	10	0.15	7	1.8	1850000	0.8	0.001	N/A	N/A	N/A	N/A

Release Adjustments Over Time

	Particle Adjustment											Radon Adjustment										
Time step	Time 1	Time 2	Time 3	Time 4	Time 5	Time 6	Time 7	Time 8	Time 9	Time 10	Time 11	Time 1	Time 2	Time 3	Time 4	Time 5	Time 6	Time 7	Time 8	Time 9	Time 10	Time 11
Duration (years)	1	1	1	1	1	1	1	1	1	1	1	1	1	1	1	1	1	1	1	1	1	1
Dryer stack	0	0.1	0.3	0.5	0.6	0.6	0.5	0.3	0.1	0	0	0	0.1	0.3	0.5	0.6	0.6	0.5	0.3	0.1	0	0
New Well Field	0	0	0	0	0	0	0	0	0	0	0	0.5	1	1	1	1	0.5	0	0	0	0	0
Production Well Field	0	0.1	0.3	0.5	0.6	0.6	0.5	0.3	0.1	0	0	0	0.1	0.3	0.5	0.6	0.6	0.5	0.3	0.1	0	0
Production Well Field - purge	0	0.1	0.3	0.5	0.6	0.6	0.5	0.3	0.1	0	0	0	0.1	0.3	0.5	0.6	0.6	0.5	0.3	0.1	0	0
Production Well Field - IX	0	0.1	0.3	0.5	0.6	0.6	0.5	0.3	0.1	0	0	0	0.1	0.3	0.5	0.6	0.6	0.5	0.3	0.1	0	0
Restoration Well Field	0	0	0	0	0.1	0.3	0.4	0.4	0.4	0.3	0.1	0	0	0	0	0.1	0.3	0.4	0.4	0.4	0.3	0.1
Restoration Well Field - purge	0	0	0	0	0.1	0.3	0.4	0.4	0.4	0.3	0.1	0	0	0	0	0.1	0.3	0.4	0.4	0.4	0.3	0.1
Land Application Area	0	0.1	0.3	0.5	0.7	0.9	0.9	0.7	0.5	0.3	0.1	0	0.1	0.3	0.5	0.7	0.9	0.9	0.7	0.5	0.3	0.1

Vegetable Ingestion Parameters

(Return to Table of Contents)

Vegetation Type	Infant Vegetable Ingestion Fraction	Child Vegetable Ingestion Fraction	Teenager Vegetable Ingestion Fraction	Adult Vegetable Ingestion Fraction	Population Vegetable Fraction
Above Ground	0.00E+00	3.60E-01	3.80E-01	3.80E-01	7.80E-01
Potatoes	0.00E+00	5.70E-01	5.50E-01	5.70E-01	2.00E-01
Below Ground	0.00E+00	7.00E-02	7.00E-02	5.00E-02	2.00E-02

Met JFD

(Return to Table of Contents)

Direction	Stability Class	0.67 m/s	2.46 m/s	4.47 m/s	6.93 m/s	9.61 m/s	12.5 m/s
N	A	0.00019	0.00005	0.00000	0.00000	0.00000	0.00000
NNE	A	0.00035	0.00008	0.00000	0.00000	0.00000	0.00000
NE	A	0.00036	0.00012	0.00000	0.00000	0.00000	0.00000
ENE	A	0.00016	0.00002	0.00000	0.00000	0.00000	0.00000
E	A	0.00030	0.00007	0.00000	0.00000	0.00000	0.00000
ESE	A	0.00155	0.00025	0.00000	0.00000	0.00000	0.00000
SE	A	0.00121	0.00027	0.00000	0.00000	0.00000	0.00000
SSE	A	0.00083	0.00022	0.00000	0.00000	0.00000	0.00000
S	A	0.00159	0.00032	0.00000	0.00000	0.00000	0.00000
SSW	A	0.00035	0.00013	0.00000	0.00000	0.00000	0.00000
SW	A	0.00194	0.00035	0.00000	0.00000	0.00000	0.00000
WSW	A	0.00078	0.00020	0.00000	0.00000	0.00000	0.00000
W	A	0.00066	0.00008	0.00000	0.00000	0.00000	0.00000
WNW	A	0.00082	0.00010	0.00000	0.00000	0.00000	0.00000
NW	A	0.00070	0.00017	0.00000	0.00000	0.00000	0.00000
NNW	A	0.00040	0.00003	0.00000	0.00000	0.00000	0.00000
N	B	0.00355	0.00088	0.00035	0.00000	0.00000	0.00000
NNE	B	0.00430	0.00123	0.00047	0.00000	0.00000	0.00000
NE	B	0.00411	0.00185	0.00066	0.00000	0.00000	0.00000
ENE	B	0.00136	0.00054	0.00032	0.00000	0.00000	0.00000
E	B	0.00140	0.00054	0.00022	0.00000	0.00000	0.00000
ESE	B	0.00090	0.00056	0.00093	0.00000	0.00000	0.00000
SE	B	0.00338	0.00249	0.00348	0.00000	0.00000	0.00000
SSE	B	0.00208	0.00165	0.00249	0.00000	0.00000	0.00000
S	B	0.00165	0.00067	0.00143	0.00000	0.00000	0.00000
SSW	B	0.00204	0.00106	0.00089	0.00000	0.00000	0.00000
SW	B	0.00276	0.00084	0.00101	0.00000	0.00000	0.00000
WSW	B	0.00365	0.00109	0.00136	0.00000	0.00000	0.00000
W	B	0.00417	0.00128	0.00118	0.00000	0.00000	0.00000
WNW	B	0.00352	0.00056	0.00180	0.00000	0.00000	0.00000

NW	B	0.00225	0.00104	0.00089	0.00000	0.00000	0.00000
NNW	B	0.00313	0.00094	0.00071	0.00000	0.00000	0.00000
N	C	0.00065	0.00189	0.00197	0.00008	0.00000	0.00000
NNE	C	0.00063	0.00180	0.00264	0.00040	0.00005	0.00000
NE	C	0.00058	0.00192	0.00251	0.00056	0.00005	0.00002
ENE	C	0.00021	0.00045	0.00050	0.00005	0.00000	0.00000
E	C	0.00023	0.00029	0.00019	0.00013	0.00000	0.00000
ESE	C	0.00027	0.00056	0.00163	0.00042	0.00000	0.00000
SE	C	0.00085	0.00345	0.01353	0.00348	0.00022	0.00002
SSE	C	0.00049	0.00219	0.00889	0.00305	0.00045	0.00012
S	C	0.00040	0.00098	0.00300	0.00202	0.00064	0.00039
SSW	C	0.00033	0.00088	0.00209	0.00254	0.00088	0.00039
SW	C	0.00048	0.00099	0.00296	0.00261	0.00084	0.00020
WSW	C	0.00095	0.00244	0.00284	0.00190	0.00064	0.00013
W	C	0.00171	0.00572	0.00545	0.00163	0.00007	0.00005
WNW	C	0.00127	0.00288	0.00623	0.00153	0.00045	0.00000
NW	C	0.00073	0.00150	0.00498	0.00200	0.00032	0.00008
NNW	C	0.00057	0.00197	0.00274	0.00067	0.00002	0.00002
N	D	0.00094	0.00178	0.00266	0.00412	0.00077	0.00003
NNE	D	0.00071	0.00145	0.00261	0.00534	0.00061	0.00019
NE	D	0.00071	0.00153	0.00379	0.00481	0.00044	0.00002
ENE	D	0.00073	0.00093	0.00077	0.00029	0.00000	0.00000
E	D	0.00057	0.00076	0.00047	0.00008	0.00000	0.00000
ESE	D	0.00073	0.00118	0.00103	0.00120	0.00008	0.00000
SE	D	0.00223	0.00441	0.01294	0.01432	0.00059	0.00002
SSE	D	0.00208	0.00397	0.00894	0.01158	0.00148	0.00039
S	D	0.00074	0.00133	0.00298	0.00668	0.00288	0.00118
SSW	D	0.00053	0.00084	0.00221	0.00944	0.00353	0.00150
SW	D	0.00075	0.00143	0.00330	0.01227	0.00569	0.00173
WSW	D	0.00136	0.00274	0.00311	0.01032	0.00328	0.00101
W	D	0.00233	0.00522	0.00761	0.00963	0.00170	0.00035
WNW	D	0.00144	0.00325	0.00850	0.02129	0.00630	0.00098
NW	D	0.00120	0.00274	0.00901	0.02629	0.00677	0.00081
NNW	D	0.00105	0.00217	0.00454	0.00768	0.00104	0.00013
N	E	0.00000	0.00108	0.00421	0.00000	0.00000	0.00000
NNE	E	0.00000	0.00098	0.00261	0.00000	0.00000	0.00000
NE	E	0.00000	0.00044	0.00118	0.00000	0.00000	0.00000
ENE	E	0.00000	0.00040	0.00024	0.00000	0.00000	0.00000
E	E	0.00000	0.00015	0.00002	0.00000	0.00000	0.00000
ESE	E	0.00000	0.00015	0.00042	0.00000	0.00000	0.00000
SE	E	0.00000	0.00091	0.00468	0.00000	0.00000	0.00000
SSE	E	0.00000	0.00089	0.00643	0.00000	0.00000	0.00000

S	E	0.00000	0.00103	0.00323	0.00000	0.00000	0.00000
SSW	E	0.00000	0.00086	0.00350	0.00000	0.00000	0.00000
SW	E	0.00000	0.00108	0.00446	0.00000	0.00000	0.00000
WSW	E	0.00000	0.00374	0.01273	0.00000	0.00000	0.00000
W	E	0.00000	0.00520	0.05597	0.00000	0.00000	0.00000
WNW	E	0.00000	0.00224	0.01847	0.00000	0.00000	0.00000
NW	E	0.00000	0.00185	0.01606	0.00000	0.00000	0.00000
NNW	E	0.00000	0.00153	0.00874	0.00000	0.00000	0.00000
N	F	0.00392	0.00458	0.00000	0.00000	0.00000	0.00000
NNE	F	0.00360	0.00300	0.00000	0.00000	0.00000	0.00000
NE	F	0.00241	0.00202	0.00000	0.00000	0.00000	0.00000
ENE	F	0.00111	0.00099	0.00000	0.00000	0.00000	0.00000
E	F	0.00036	0.00029	0.00000	0.00000	0.00000	0.00000
ESE	F	0.00045	0.00025	0.00000	0.00000	0.00000	0.00000
SE	F	0.00184	0.00232	0.00000	0.00000	0.00000	0.00000
SSE	F	0.00291	0.00387	0.00000	0.00000	0.00000	0.00000
S	F	0.00345	0.00352	0.00000	0.00000	0.00000	0.00000
SSW	F	0.00472	0.00372	0.00000	0.00000	0.00000	0.00000
SW	F	0.01120	0.01106	0.00000	0.00000	0.00000	0.00000
WSW	F	0.03006	0.04124	0.00000	0.00000	0.00000	0.00000
W	F	0.03300	0.05573	0.00000	0.00000	0.00000	0.00000
WNW	F	0.01247	0.01655	0.00000	0.00000	0.00000	0.00000
NW	F	0.00809	0.00949	0.00000	0.00000	0.00000	0.00000
NNW	F	0.00643	0.00685	0.00000	0.00000	0.00000	0.00000

Food Transfer Factors

(Return to Table of Contents)

FOOD_TYPE	U	Th	Ra	Pb	Comments
Soil to Above Ground Vegetables	2.50E-03	4.20E-03	1.40E-02	4.00E-03	(pCi/kg plant - wet weight)/(pCi/kg soil - dry weight)
Soil to Potatoes	2.50E-03	4.20E-03	3.00E-03	4.00E-03	(pCi/kg plant - wet weight)/(pCi/kg soil - dry weight)
Soil to Below Ground Vegetables	2.50E-03	4.20E-03	1.40E-02	4.00E-03	(pCi/kg plant - wet weight)/(pCi/kg soil - dry weight)
Soil to Pasture Grass	2.50E-03	4.20E-03	1.80E-02	2.80E-02	(pCi/kg plant - wet weight)/(pCi/kg soil - dry weight)
Soil to Stored Animal Feed	2.50E-03	4.20E-03	8.20E-02	3.60E-02	(pCi/kg plant - wet weight)/(pCi/kg soil - dry weight)
Animal Feed to Meat	3.40E-04	2.00E-04	5.10E-04	7.10E-04	(pCi/kg per pCi/day)
Animal Feed to Milk	6.10E-04	5.00E-06	5.90E-04	1.20E-04	(pCi/L per pCi/day)

APPENDIX D
CASE 3a USER FILE INPUT SUMMARY

MILDOS STANDARD RESULTS REPORT

Case Title: Case 3a
Version: MILDOS 4.1
File: C:\mildos4\UserFiles\Case3a_verify_4_1.mla
Date: 04/03/2019 15:52:06

Table of Contents

- **Input Listing**
  - Parameters
  - Receptors
  - Sources
  - Vegetable Ingestion Parameters
  - Population Ingestion Parameters
  - 80km Population
  - 80km Vegetation
  - 80km Meat
  - 80km Milk
  - Meteorological Joint Freq Data
  - Food Transfer Factors

Parameters

(Return to Table of Contents)

Name	Value	Description
ambientT	283	Ambient temperature (K)
amMix	400	Annual average morning mixing height (m)
anemHeight	10	Anemometer height (m)
caseFile	place holder	not used
caseInfo	Sample file to check downwind dispersion, momentum driven plume	Additional user-specified information for the case under study
caseTitle	Case 3a	User-defined title for case under study
cowIngestRate	50	Ingestion rate (feed wet weight) of animals (beef cattle and milk cows) (kg/d)
cutoffHeight	50	Height above which to use Briggs urban dispersion coefficients (m)
decayPlants	14	Weathering decay half-life for loss of contamination from vegetation due to weathering processes (days)
fracEdibleLeafAnimal	1	Fraction of radionuclides reaching the edible portion of animal-consumed vegetation (unitless)
fracEdibleLeafHuman	1	Fraction of radionuclides reaching the edible portion of human-consumed leafy vegetables (unitless)
fracEdibleRoot	0.1	Fraction of radionuclides reaching the edible portion of human-consumed root vegetables (unitless)

fracHayInd	0.5	Fraction of livestock feed from stored hay for individual consumption (unitless)
fracHayPop	0.5	Fraction of livestock feed from stored hay for consumption by the general population (unitless)
fracMeatPrep	1	Fraction of radioactivity in meat remaining after food preparation (unitless)
fracMilkPrep	1	Fraction of radioactivity in milk remaining after food preparation (unitless)
fracPastureInd	0.5	Fraction of livestock feed from pasture grass for individual consumption (unitless)
fracPasturePop	0.5	Fraction of livestock feed from pasture grass for consumption by the general population (unitless)
fracRetain	0.2	Fraction of air-deposited radionuclides retained on vegetation (unitless)
fracVegPrep	0.5	Fraction of radioactivity in vegetables remaining after food preparation (unitless)
gridSize	5	Size of grid blocks to use when calculating air concentrations (m)
isPopExposure	True	Option to perform population ingestion calculations; true (1) or false (0)
isPopIngest	TRUE	Option to perform population ingestion calculations; true (1) or false (0)
jfdNotes	Each direction targets only one receptor with one stability class - wind speed combination	Stores user notes as needed
mapProj	Local Coordinates	Contains the current map projection being used for the map display; consists of a list of the UTM zone, the datum (WGS84 or NAD83), and the EPSG code for the projection (EPSG stands for what used to be the European Petroleum Survey Group)
mapState		String with serialized map state
maxDistCalcArea	1000	Maximum distance between an area source and receptor where the area source model will be used; the source will be treated as a point source beyond the specified distance (m)
meatProd	0	Farmland meat productivity (kg/yr)
metFreq	0	Frequency of time wind is blowing in a specific direction, under a specific stability category, at a given wind speed (unitless)
milkProd	0	Farmland milk productivity (kg/yr)
nPeople	0	Number of people in sector segment (persons)
partFrac	0	Fraction of particle size distribution for a given average particle size (unitless)
pmMix	1000	Annual afternoon mixing height (m)
rain	1.1	Rainfall rate (m/yr)
relRate	0	Nuclide release rate (Ci/yr)
resuspDepVel	1e-5	Deposition velocity for particulates associated with the intial and final resuspension factors specified (m/s)
resuspFacFinal	1.00E-09	Final resuspension factor for determining resuspended air concentrations (1/m)

resuspFacInitial	1.00E-05	Initial resuspension factor for determining resuspended air concentrations (1/m)
resuspHalfLife	0.137	Resuspension factor decay half-life (yr)
soilArealDen	240	Areal surface density / effective surface soil density (kg/m^2)
soilConc	0	Nuclide soil concentration for area sources (pCi/g)
soilHalfLife	50	Environmental soil loss half-life (yr)
vegProd	0	Farmland vegetable productivity (kg/yr)
vGrow	60	Exposure time to radionuclides during the human-consumed vegetable growing season(d)
vGrowPasture	30	Exposure time to radionuclides during the animal-consumed vegetation growing season (d)
yieldMeat	3070	Farmland production rate of meat for population ingestion calculations (kg/km^2-yr)
yieldMilk	6710	Farmland production rate of milk for population ingestion calculations (kg/km^2-yr)
yieldVeg	55800	Farmland production rate of vegetation for population ingestion calculations (kg/km^2-yr)
yVeg	2	Yield density of human-consumed vegetation on farmland (kg/m^2)
yVegPasture	0.75	Yield density of animal-consumed vegetation on farmland (kg/m^2)
optOutTable	STD	Option that controls contents of the analysis output. STD - standard output only; STD_CUSTOM - standard and user specified custom output
optOutWho	1	Option that specifies what receptor type custom output to generate. 1 - individual receptors; 2 - population receptors; 3 - both individual and population receptors.

Receptors

(Return to Table of Contents)

Name	x (m)	y (m)	z (m)	Age Group	Indoor Occupancy Fraction	Outdoor Occupancy Fraction	Indoor External Shielding Factor	Indoor Inhalation Shielding Factor	Consider Vegetation Pathway?	Vegetation Ingestion Rate (kg/yr)	Consider Meat Pathway?	Meat Ingestion Rate (kg/yr)	Consider Milk Pathway?	Milk Ingestion Rate (kg/yr)	No.	Rn-222 Indoor Eq. Fraction	User Input Rn-222 Outdoor Eq. Frac.?	Rn-222 Outdoor Eq. Fraction
N Receptor	0.00E+00	1.00E+03	4.00E+00	Adult	5.83E-01	4.16E-01	7.00E-01	1.00E+00	True	1.05E+02	True	7.83E+01	True	1.30E+02	1	5.00E-01	True	7.00E-01
NNE Receptor	3.83E+02	9.24E+02	4.00E+00	Adult	5.83E-01	4.16E-01	7.00E-01	1.00E+00	True	1.05E+02	True	7.83E+01	True	1.30E+02	2	5.00E-01	True	7.00E-01
NE Receptor	7.07E+02	7.07E+02	4.00E+00	Adult	5.83E-01	4.16E-01	7.00E-01	1.00E+00	True	1.05E+02	True	7.83E+01	True	1.30E+02	3	5.00E-01	True	7.00E-01
ENE Receptor	9.24E+02	3.83E+02	4.00E+00	Adult	5.83E-01	4.16E-01	7.00E-01	1.00E+00	True	1.05E+02	True	7.83E+01	True	1.30E+02	4	5.00E-01	True	7.00E-01
E Receptor	1.00E+03	0.00E+00	4.00E+00	Adult	5.83E-01	4.16E-01	7.00E-01	1.00E+00	True	1.05E+02	True	7.83E+01	True	1.30E+02	5	5.00E-01	True	7.00E-01
ESE Receptor	9.24E+02	-3.83E+02	4.00E+00	Adult	5.83E-01	4.16E-01	7.00E-01	1.00E+00	True	1.05E+02	True	7.83E+01	True	1.30E+02	6	5.00E-01	True	7.00E-01
SE Receptor	7.07E+02	-7.07E+02	4.00E+00	Adult	5.83E-01	4.16E-01	7.00E-01	1.00E+00	True	1.05E+02	True	7.83E+01	True	1.30E+02	7	5.00E-01	True	7.00E-01
SSE Receptor	3.83E+02	-9.24E+02	4.00E+00	Adult	5.83E-01	4.16E-01	7.00E-01	1.00E+00	True	1.05E+02	True	7.83E+01	True	1.30E+02	8	5.00E-01	True	7.00E-01
S Receptor	0.00E+00	-1.00E+03	4.00E+00	Adult	5.83E-01	4.16E-01	8.25E-01	1.00E+00	True	1.05E+02	True	7.83E+01	True	1.30E+02	9	5.00E-01	True	7.00E-01
SSW Receptor	-3.83E+02	-9.24E+02	4.00E+00	Adult	5.83E-01	4.16E-01	8.25E-01	1.00E+00	True	1.05E+02	True	7.83E+01	True	1.30E+02	10	5.00E-01	True	7.00E-01
SW Receptor	-7.07E+02	-7.07E+02	4.00E+00	Adult	5.83E-01	4.16E-01	8.25E-01	1.00E+00	True	1.05E+02	True	7.83E+01	True	1.30E+02	11	5.00E-01	True	7.00E-01
WSW Receptor	-9.24E+02	-3.83E+02	4.00E+00	Adult	5.83E-01	4.16E-01	8.25E-01	1.00E+00	True	1.05E+02	True	7.83E+01	True	1.30E+02	12	5.00E-01	True	7.00E-01
W Receptor	-1.00E+03	0.00E+00	4.00E+00	Adult	5.83E-01	4.16E-01	8.25E-01	1.00E+00	True	1.05E+02	True	7.83E+01	True	1.30E+02	13	5.00E-01	True	7.00E-01
WNW Receptor	-9.24E+02	3.83E+02	4.00E+00	Adult	5.83E-01	4.16E-01	8.25E-01	1.00E+00	True	1.05E+02	True	7.83E+01	True	1.30E+02	14	5.00E-01	True	7.00E-01
NW Receptor to NW	-7.07E+02	7.07E+02	4.00E+00	Adult	5.83E-01	4.16E-01	8.25E-01	1.00E+00	True	1.05E+02	True	7.83E+01	True	1.30E+02	15	5.00E-01	True	7.00E-01
NNW Receptor	-3.83E+02	9.24E+02	4.00E+00	Adult	5.83E-01	4.16E-01	8.25E-01	1.00E+00	True	1.05E+02	True	7.83E+01	True	1.30E+02	16	5.00E-01	True	7.00E-01
Far SSW Receptor	-6.51E+02	-1.57E+03	4.00E+00	Adult	5.83E-01	4.16E-01	8.25E-01	1.00E+00	True	1.05E+02	True	7.83E+01	True	1.30E+02	17	5.00E-01	True	7.00E-01

Sources

(Return to Table of Contents)

Name	Source Type	Release Type	Particle Distribution Set	x (m)	y (m)	z (m)	Dispersion Coefficients	No.
Point Source 1	Point	Point	3	0.00E+00	0.00E+00	1.50E+01	Pasquill-Gifford	1

Source Release Terms Before Time Step Adjustment [Ci/y]

Source	Rn-222	U-238	Th-230	Ra-226	Pb-210	Rn-220	Th-232	Ra-228	Th-228
Point Source 1	4.20E+01	2.60E-02	2.60E-02	2.60E-02	2.60E-02	1.50E+00	8.00E-04	8.00E-04	8.00E-04

Source Type Specific Parameters

Point Sources

Name	Source Type	Inside Stack Diameter (m)	Effluent Exit Velocity (m/s)	Rn-220 Release Rate	Rn-222 Release Rate	Momentum based rise?	Heat Release	Yellowcake Production Rate (kg/d)	Fraction Released to Stack
Point Source 1	Point	1.5	11	1.5	42	True	0	N/A	N/A

(table continued)

Name	Th Fraction	Ra Fraction	Others Fraction	Water Rate	Column Volume	Column Empty / Exchange Rate	Resin Porosity	Well Field Source
Point Source 1	N/A	N/A	N/A	N/A	N/A	N/A	N/A	N/A

Release Adjustments Over Time

Source	Particle Adjustment				Radon Adjustment			
Time step	Time 1	Time 2	Time 3	Time 4	Time 1	Time 2	Time 3	Time 4
Duration (years)	1	2	2	1	1	2	2	1
Point Source 1	0.8	1	1	0.9	0.8	1	1	0.9

Vegetable Ingestion Parameters

(Return to Table of Contents)

Vegetation Type	Infant Vegetable Ingestion Fraction	Child Vegetable Ingestion Fraction	Teenager Vegetable Ingestion Fraction	Adult Vegetable Ingestion Fraction	Population Vegetable Fraction
Above Ground	0.00E+00	3.60E-01	3.80E-01	3.80E-01	7.80E-01
Potatoes	0.00E+00	5.70E-01	5.50E-01	5.70E-01	2.00E-01
Below Ground	0.00E+00	7.00E-02	7.00E-02	5.00E-02	2.00E-02

Population Ingestion Parameters

(Return to Table of Contents)

Age Group	Fraction of Population	Vegetation Ingestion Rate (kg/yr)	Meat Ingestion Rate (kg/yr)	Milk Ingestion Rate (kg/yr)
Infant	1.79E-02	0.00E+00	0.00E+00	2.08E+02
Child	1.65E-01	2.38E+02	4.87E+01	2.35E+02
Teenager	1.96E-01	3.07E+02	7.80E+01	2.91E+02
Adult	6.22E-01	2.86E+02	1.28E+02	1.76E+02

80km Population

(Return to Table of Contents)

Direction	1-2 km	2-3 km	3-4 km	4-5 km	5-10 km	10-20 km	20-30 km	30-40 km	40-50 km	50-60 km	60-70 km	70-80 km
N	1	2	3	4	5	6	7	8	9	10	11	12
NNE	0	286	1603	1288	221	4073	6789	9505	12220	14591	15101	15552
NE	0	1288	1402	258	779	4073	6789	9505	12220	13210	12551	14482
ENE	0	1431	1202	1545	221	883	1472	3921	8870	14092	15611	16542
E	0	1431	2003	258	221	883	1472	2060	2649	3238	5900	8403
ESE	572	1431	2003	773	221	883	1472	2060	2649	3238	3826	4415
SE	572	143	21	26	221	883	1472	2060	2707	3677	4761	6404
SSE	916	215	21	26	221	883	1472	2060	3296	4995	5904	6812
S	286	143	200	26	221	883	1472	2060	2721	4995	5904	6812
SSW	12	15	21	26	221	883	2068	3870	3656	4995	5904	6812
SW	12	15	21	26	221	1360	3460	4844	6143	6304	6368	6812
WSW	12	15	21	26	370	2076	3460	4844	4789	4665	4838	5162
W	114	15	21	26	519	2076	3460	4844	2809	3214	3798	4382
WNW	114	15	21	26	519	2009	2904	3677	4427	4092	3798	4382
NW	229	15	21	44	519	1476	2348	3287	4226	5166	5841	6384
NNW	12	11	10	9	8	7	6	5	4	3	2	1

80km Vegetation (kg/yr)

(Return to Table of Contents)

Direction	1-2 km	2-3 km	3-4 km	4-5 km	5-10 km	10-20 km	20-30 km	30-40 km	40-50 km	50-60 km	60-70 km	70-80 km
N	0.00E+00	0.00E+00	0.00E+00	0.00E+00	0.00E+00	0.00E+00	3.90E+05	1.10E+06	1.70E+06	2.50E+06	4.20E+04	1.20E+05
NNE	0.00E+00	0.00E+00	0.00E+00	0.00E+00	0.00E+00	6.90E+02	4.50E+05	8.70E+05	1.40E+06	2.30E+06	3.50E+05	3.90E+05
NE	0.00E+00	0.00E+00	0.00E+00	0.00E+00	0.00E+00	3.30E+07	4.80E+05	7.90E+05	1.20E+06	1.20E+06	0.00E+00	8.30E+04
ENE	0.00E+00	0.00E+00	0.00E+00	0.00E+00	0.00E+00	4.40E+04	4.70E+05	7.90E+05	1.00E+06	8.80E+05	0.00E+00	1.00E+05
E	0.00E+00	0.00E+00	0.00E+00	0.00E+00	0.00E+00	1.10E+05	4.50E+04	2.70E+05	4.40E+05	3.90E+05	0.00E+00	9.10E+01
ESE	0.00E+00	0.00E+00	0.00E+00	0.00E+00	0.00E+00	1.20E+05	2.80E+05	1.10E+03	2.30E+02	1.30E+03	1.20E+02	7.00E+02
SE	0.00E+00	0.00E+00	0.00E+00	0.00E+00	0.00E+00	1.20E+05	5.30E+05	2.80E+06	6.60E+06	2.20E+06	2.20E+02	3.30E+02
SSE	0.00E+00	0.00E+00	0.00E+00	0.00E+00	0.00E+00	1.10E+05	5.80E+05	2.80E+06	1.20E+07	1.40E+07	0.00E+00	1.00E+05
S	0.00E+00	0.00E+00	0.00E+00	0.00E+00	0.00E+00	9.00E+04	5.80E+05	9.70E+05	5.10E+06	4.80E+06	3.20E+05	1.10E+05
SSW	0.00E+00	0.00E+00	0.00E+00	0.00E+00	0.00E+00	4.90E+04	5.80E+05	9.70E+05	1.00E+06	7.40E+05	5.90E+05	6.40E+05
SW	0.00E+00	0.00E+00	0.00E+00	0.00E+00	0.00E+00	3.90E+03	5.30E+05	8.90E+05	1.00E+06	7.50E+05	1.70E+05	2.90E+01
WSW	0.00E+00	0.00E+00	0.00E+00	0.00E+00	0.00E+00	0.00E+00	2.50E+05	4.90E+05	8.50E+05	1.10E+06	0.00E+00	1.00E+05
W	0.00E+00	0.00E+00	0.00E+00	0.00E+00	0.00E+00	0.00E+00	2.60E+05	3.40E+05	1.60E+05	7.00E+05	1.60E+02	1.20E+02
WNW	0.00E+00	0.00E+00	0.00E+00	0.00E+00	0.00E+00	0.00E+00	2.40E+05	4.00E+05	1.80E+05	5.60E+04	5.00E+02	6.30E+02
NW	0.00E+00	0.00E+00	0.00E+00	0.00E+00	0.00E+00	0.00E+00	4.30E+06	3.10E+05	3.70E+05	3.10E+05	7.10E+01	4.00E+02
NNW	0.00E+00	0.00E+00	0.00E+00	0.00E+00	0.00E+00	0.00E+00	2.60E+06	2.00E+06	1.10E+06	1.00E+06	1.20E+02	0.00E+00

80km Meat (kg/yr)

(Return to Table of Contents)

Direction	1-2 km	2-3 km	3-4 km	4-5 km	5-10 km	10-20 km	20-30 km	30-40 km	40-50 km	50-60 km	60-70 km	70-80 km
N	0.00E+00	0.00E+00	0.00E+00	0.00E+00	0.00E+00	0.00E+00	1.80E+06	3.10E+06	4.10E+06	6.30E+06	0.00E+00	1.00E+05
NNE	0.00E+00	0.00E+00	0.00E+00	0.00E+00	0.00E+00	3.10E+03	2.10E+06	3.40E+06	4.30E+06	6.70E+06	0.00E+00	1.00E+05
NE	0.00E+00	0.00E+00	0.00E+00	0.00E+00	0.00E+00	9.70E+07	2.20E+06	3.60E+06	4.80E+06	5.80E+06	6.50E+05	7.60E+05
ENE	0.00E+00	0.00E+00	0.00E+00	0.00E+00	0.00E+00	1.10E+05	2.10E+06	3.60E+06	5.30E+06	8.00E+06	7.90E+06	8.10E+06
E	0.00E+00	0.00E+00	0.00E+00	0.00E+00	0.00E+00	1.80E+05	2.30E+05	1.30E+06	3.40E+06	4.40E+06	3.80E+06	2.90E+06
ESE	0.00E+00	0.00E+00	0.00E+00	0.00E+00	0.00E+00	1.90E+05	5.00E+05	1.10E+05	5.40E+04	3.20E+05	2.00E+06	4.40E+06
SE	0.00E+00	0.00E+00	0.00E+00	0.00E+00	0.00E+00	2.00E+05	8.80E+05	8.20E+05	4.00E+05	1.40E+05	1.80E+06	3.50E+06
SSE	0.00E+00	0.00E+00	0.00E+00	0.00E+00	0.00E+00	1.90E+05	9.60E+05	1.30E+06	7.30E+05	1.20E+06	4.70E+04	1.20E+06
S	0.00E+00	0.00E+00	0.00E+00	0.00E+00	0.00E+00	1.50E+05	9.60E+05	1.60E+06	1.70E+06	2.40E+06	1.10E+06	7.90E+05
SSW	0.00E+00	0.00E+00	0.00E+00	0.00E+00	0.00E+00	8.10E+04	9.60E+05	1.60E+06	2.50E+06	3.80E+06	2.00E+06	3.30E+06
SW	0.00E+00	0.00E+00	0.00E+00	0.00E+00	0.00E+00	6.30E+03	1.20E+06	2.60E+06	4.20E+06	5.10E+06	1.90E+06	7.40E+06
WSW	0.00E+00	0.00E+00	0.00E+00	0.00E+00	0.00E+00	0.00E+00	3.40E+06	6.30E+06	7.80E+06	9.90E+06	3.90E+05	9.70E+06
W	0.00E+00	0.00E+00	0.00E+00	0.00E+00	0.00E+00	0.00E+00	3.60E+06	6.30E+06	7.90E+06	1.00E+07	1.70E+06	1.80E+06
WNW	0.00E+00	0.00E+00	0.00E+00	0.00E+00	0.00E+00	0.00E+00	3.30E+06	6.60E+06	8.40E+06	5.30E+06	4.60E+06	5.60E+06
NW	0.00E+00	0.00E+00	0.00E+00	0.00E+00	0.00E+00	0.00E+00	6.40E+07	6.80E+06	8.80E+06	9.20E+06	4.20E+06	5.70E+06
NNW	0.00E+00	0.00E+00	0.00E+00	0.00E+00	0.00E+00	0.00E+00	3.80E+07	3.00E+07	6.70E+06	7.80E+06	2.60E+06	1.60E+06

80km Milk (kg/yr)

(Return to Table of Contents)

Direction	1-2 km	2-3 km	3-4 km	4-5 km	5-10 km	10-20 km	20-30 km	30-40 km	40-50 km	50-60 km	60-70 km	70-80 km
N	0.00E+00	0.00E+00	0.00E+00	0.00E+00	0.00E+00	0.00E+00	0.00E+00	0.00E+00	0.00E+00	1.00E+05	0.00E+00	9.10E+01
NNE	0.00E+00	0.00E+00	0.00E+00	0.00E+00	0.00E+00	0.00E+00	0.00E+00	0.00E+00	0.00E+00	1.00E+05	1.20E+02	7.00E+02
NE	0.00E+00	0.00E+00	0.00E+00	0.00E+00	0.00E+00	3.40E+05	0.00E+00	0.00E+00	0.00E+00	1.10E+03	2.20E+02	3.30E+02
ENE	0.00E+00	0.00E+00	0.00E+00	0.00E+00	0.00E+00	3.70E+02	3.30E+01	0.00E+00	1.60E+03	8.80E+03	0.00E+00	1.00E+05
E	0.00E+00	0.00E+00	0.00E+00	0.00E+00	0.00E+00	1.30E+03	1.30E+02	0.00E+00	2.80E+03	4.10E+03	3.20E+05	1.10E+05
ESE	0.00E+00	0.00E+00	0.00E+00	0.00E+00	0.00E+00	1.40E+03	3.40E+03	0.00E+00	0.00E+00	0.00E+00	5.90E+05	6.40E+05
SE	0.00E+00	0.00E+00	0.00E+00	0.00E+00	0.00E+00	1.40E+03	6.30E+03	4.70E+03	0.00E+00	0.00E+00	1.70E+05	2.90E+01
SSE	0.00E+00	0.00E+00	0.00E+00	0.00E+00	0.00E+00	1.30E+03	6.90E+03	8.70E+03	8.60E+00	2.40E+03	0.00E+00	1.00E+05
S	0.00E+00	0.00E+00	0.00E+00	0.00E+00	0.00E+00	1.10E+03	6.90E+03	1.20E+04	1.10E+04	4.80E+04	1.60E+02	1.20E+02
SSW	0.00E+00	0.00E+00	0.00E+00	0.00E+00	0.00E+00	5.90E+02	6.90E+03	1.20E+04	3.10E+05	9.60E+05	5.00E+02	6.30E+02
SW	0.00E+00	0.00E+00	0.00E+00	0.00E+00	0.00E+00	4.60E+01	6.00E+03	3.10E+04	2.50E+05	7.70E+05	7.10E+01	4.00E+02
WSW	0.00E+00	0.00E+00	0.00E+00	0.00E+00	0.00E+00	0.00E+00	7.60E+00	3.20E+04	1.60E+05	2.10E+05	1.20E+02	0.00E+00
W	0.00E+00	0.00E+00	0.00E+00	0.00E+00	0.00E+00	0.00E+00	0.00E+00	0.00E+00	2.30E+04	1.30E+05	2.00E+06	3.30E+06
WNW	0.00E+00	0.00E+00	0.00E+00	0.00E+00	0.00E+00	0.00E+00	0.00E+00	0.00E+00	0.00E+00	1.00E+05	1.90E+06	7.40E+06
NW	0.00E+00	0.00E+00	0.00E+00	0.00E+00	0.00E+00	0.00E+00	0.00E+00	0.00E+00	0.00E+00	1.00E+05	3.90E+05	9.70E+06
NNW	0.00E+00	0.00E+00	0.00E+00	0.00E+00	0.00E+00	0.00E+00	0.00E+00	0.00E+00	0.00E+00	1.00E+05	1.70E+06	1.80E+06

Met JFD

(Return to Table of Contents)

Direction	Stability Class	0.67 m/s	2.46 m/s	4.47 m/s	6.93 m/s	9.61 m/s	12.5 m/s
N	A	0.06250	0.00000	0.00000	0.00000	0.00000	0.00000
NNE	A	0.00000	0.06250	0.00000	0.00000	0.00000	0.00000
NE	A	0.00000	0.00000	0.00000	0.00000	0.00000	0.00000
ENE	A	0.00000	0.00000	0.00000	0.00000	0.00000	0.00000
E	A	0.00000	0.00000	0.00000	0.00000	0.00000	0.00000
ESE	A	0.00000	0.00000	0.00000	0.00000	0.00000	0.00000
SE	A	0.00000	0.00000	0.00000	0.00000	0.00000	0.00000
SSE	A	0.00000	0.00000	0.00000	0.00000	0.00000	0.00000
S	A	0.00000	0.00000	0.00000	0.00000	0.00000	0.00000
SSW	A	0.00000	0.00000	0.00000	0.00000	0.00000	0.00000
SW	A	0.00000	0.00000	0.00000	0.00000	0.00000	0.00000
WSW	A	0.00000	0.00000	0.00000	0.00000	0.00000	0.00000
W	A	0.00000	0.00000	0.00000	0.00000	0.00000	0.00000
WNW	A	0.00000	0.00000	0.00000	0.00000	0.00000	0.00000
NW	A	0.00000	0.00000	0.00000	0.00000	0.00000	0.00000
NNW	A	0.00000	0.00000	0.00000	0.00000	0.00000	0.00000
N	B	0.00000	0.00000	0.00000	0.00000	0.00000	0.00000
NNE	B	0.00000	0.00000	0.00000	0.00000	0.00000	0.00000
NE	B	0.00000	0.06250	0.00000	0.00000	0.00000	0.00000
ENE	B	0.00000	0.00000	0.06250	0.00000	0.00000	0.00000
E	B	0.00000	0.00000	0.00000	0.06250	0.00000	0.00000

ESE	B	0.00000	0.00000	0.00000	0.00000	0.00000	0.00000
SE	B	0.00000	0.00000	0.00000	0.00000	0.00000	0.00000
SSE	B	0.00000	0.00000	0.00000	0.00000	0.00000	0.00000
S	B	0.00000	0.00000	0.00000	0.00000	0.00000	0.00000
SSW	B	0.00000	0.00000	0.00000	0.00000	0.00000	0.00000
SW	B	0.00000	0.00000	0.00000	0.00000	0.00000	0.00000
WSW	B	0.00000	0.00000	0.00000	0.00000	0.00000	0.00000
W	B	0.00000	0.00000	0.00000	0.00000	0.00000	0.00000
WNW	B	0.00000	0.00000	0.00000	0.00000	0.00000	0.00000
NW	B	0.00000	0.00000	0.00000	0.00000	0.00000	0.00000
NNW	B	0.00000	0.00000	0.00000	0.00000	0.00000	0.00000
N	C	0.00000	0.00000	0.00000	0.00000	0.00000	0.00000
NNE	C	0.00000	0.00000	0.00000	0.00000	0.00000	0.00000
NE	C	0.00000	0.00000	0.00000	0.00000	0.00000	0.00000
ENE	C	0.00000	0.00000	0.00000	0.00000	0.00000	0.00000
E	C	0.00000	0.00000	0.00000	0.00000	0.00000	0.00000
ESE	C	0.00000	0.00000	0.06250	0.00000	0.00000	0.00000
SE	C	0.00000	0.00000	0.00000	0.00000	0.06250	0.00000
SSE	C	0.00000	0.00000	0.00000	0.00000	0.00000	0.06250
S	C	0.00000	0.00000	0.00000	0.00000	0.00000	0.00000
SSW	C	0.00000	0.00000	0.00000	0.00000	0.00000	0.00000
SW	C	0.00000	0.00000	0.00000	0.00000	0.00000	0.00000
WSW	C	0.00000	0.00000	0.00000	0.00000	0.00000	0.00000
W	C	0.00000	0.00000	0.00000	0.00000	0.00000	0.00000
WNW	C	0.00000	0.00000	0.00000	0.00000	0.00000	0.00000
NW	C	0.00000	0.00000	0.00000	0.00000	0.00000	0.00000
NNW	C	0.00000	0.00000	0.00000	0.00000	0.00000	0.00000
N	D	0.00000	0.00000	0.00000	0.00000	0.00000	0.00000
NNE	D	0.00000	0.00000	0.00000	0.00000	0.00000	0.00000
NE	D	0.00000	0.00000	0.00000	0.00000	0.00000	0.00000
ENE	D	0.00000	0.00000	0.00000	0.00000	0.00000	0.00000
E	D	0.00000	0.00000	0.00000	0.00000	0.00000	0.00000
ESE	D	0.00000	0.00000	0.00000	0.00000	0.00000	0.00000
SE	D	0.00000	0.00000	0.00000	0.00000	0.00000	0.00000
SSE	D	0.00000	0.00000	0.00000	0.00000	0.00000	0.00000
S	D	0.00000	0.00000	0.00000	0.06250	0.00000	0.00000
SSW	D	0.00000	0.00000	0.00000	0.00000	0.06250	0.00000
SW	D	0.00000	0.00000	0.00000	0.00000	0.00000	0.06250
WSW	D	0.00000	0.00000	0.00000	0.00000	0.00000	0.00000
W	D	0.00000	0.00000	0.00000	0.00000	0.00000	0.00000
WNW	D	0.00000	0.00000	0.00000	0.00000	0.00000	0.00000
NW	D	0.00000	0.00000	0.00000	0.00000	0.00000	0.00000

NNW	D	0.00000	0.00000	0.00000	0.00000	0.00000	0.00000
N	E	0.00000	0.00000	0.00000	0.00000	0.00000	0.00000
NNE	E	0.00000	0.00000	0.00000	0.00000	0.00000	0.00000
NE	E	0.00000	0.00000	0.00000	0.00000	0.00000	0.00000
ENE	E	0.00000	0.00000	0.00000	0.00000	0.00000	0.00000
E	E	0.00000	0.00000	0.00000	0.00000	0.00000	0.00000
ESE	E	0.00000	0.00000	0.00000	0.00000	0.00000	0.00000
SE	E	0.00000	0.00000	0.00000	0.00000	0.00000	0.00000
SSE	E	0.00000	0.00000	0.00000	0.00000	0.00000	0.00000
S	E	0.00000	0.00000	0.00000	0.00000	0.00000	0.00000
SSW	E	0.00000	0.00000	0.00000	0.00000	0.00000	0.00000
SW	E	0.00000	0.00000	0.00000	0.00000	0.00000	0.00000
WSW	E	0.00000	0.06250	0.00000	0.00000	0.00000	0.00000
W	E	0.00000	0.00000	0.06250	0.00000	0.00000	0.00000
WNW	E	0.00000	0.00000	0.00000	0.06250	0.00000	0.00000
NW	E	0.00000	0.00000	0.00000	0.00000	0.00000	0.00000
NNW	E	0.00000	0.00000	0.00000	0.00000	0.00000	0.00000
N	F	0.00000	0.00000	0.00000	0.00000	0.00000	0.00000
NNE	F	0.00000	0.00000	0.00000	0.00000	0.00000	0.00000
NE	F	0.00000	0.00000	0.00000	0.00000	0.00000	0.00000
ENE	F	0.00000	0.00000	0.00000	0.00000	0.00000	0.00000
E	F	0.00000	0.00000	0.00000	0.00000	0.00000	0.00000
ESE	F	0.00000	0.00000	0.00000	0.00000	0.00000	0.00000
SE	F	0.00000	0.00000	0.00000	0.00000	0.00000	0.00000
SSE	F	0.00000	0.00000	0.00000	0.00000	0.00000	0.00000
S	F	0.00000	0.00000	0.00000	0.00000	0.00000	0.00000
SSW	F	0.00000	0.00000	0.00000	0.00000	0.00000	0.00000
SW	F	0.00000	0.00000	0.00000	0.00000	0.00000	0.00000
WSW	F	0.00000	0.00000	0.00000	0.00000	0.00000	0.00000
W	F	0.00000	0.00000	0.00000	0.00000	0.00000	0.00000
WNW	F	0.00000	0.00000	0.00000	0.00000	0.00000	0.00000
NW	F	0.06250	0.00000	0.00000	0.00000	0.00000	0.00000
NNW	F	0.00000	0.06250	0.00000	0.00000	0.00000	0.00000

Food Transfer Factors

(Return to Table of Contents)

FOOD_TYPE	U	Th	Ra	Pb	Comments
Soil to Above Ground Vegetables	2.50E-03	4.20E-03	1.40E-02	4.00E-03	(pCi/kg plant - wet weight)/(pCi/kg soil - dry weight)
Soil to Potatoes	2.50E-03	4.20E-03	3.00E-03	4.00E-03	(pCi/kg plant - wet weight)/(pCi/kg soil - dry weight)
Soil to Below Ground Vegetables	2.50E-03	4.20E-03	1.40E-02	4.00E-03	(pCi/kg plant - wet weight)/(pCi/kg soil - dry weight)
Soil to Pasture Grass	2.50E-03	4.20E-03	1.80E-02	2.80E-02	(pCi/kg plant - wet weight)/(pCi/kg soil - dry weight)
Soil to Stored Animal Feed	2.50E-03	4.20E-03	8.20E-02	3.60E-02	(pCi/kg plant - wet weight)/(pCi/kg soil - dry weight)
Animal Feed to Meat	3.40E-04	2.00E-04	5.10E-04	7.10E-04	(pCi/kg per pCi/day)
Animal Feed to Milk	6.10E-04	5.00E-06	5.90E-04	1.20E-04	(pCi/L per pCi/day)

APPENDIX E
CASE 3b USER FILE INPUT SUMMARY

MILDOS STANDARD RESULTS REPORT

Case Title: Case 3b
Version: MILDOS 4.1
File: C:\mildos4\UserFiles\Case3b_verify_4_1.mla
Date: 04/03/2019 16:53:01

Table of Contents

- **Input Listing**
  - Parameters
  - Receptors
  - Sources
  - Vegetable Ingestion Parameters
  - Meteorological Joint Freq Data
  - Food Transfer Factors

Parameters

(Return to Table of Contents)

Name	Value	Description
ambientT	283	Ambient temperature (K)
amMix	400	Annual average morning mixing height (m)
anemHeight	10	Anemometer height (m)
caseFile	place holder	not used
caseInfo	Sample file to check downwind dispersion, momentum driven plume All receptors from Case 3a except Far SSW Receptor now combined in one and put to the north and JFD modified appropriately to get same 'individual' receptor results	Additional user-specified information for the case under study
caseTitle	Case 3b	User-defined title for case under study
cowIngestRate	50	Ingestion rate (feed wet weight) of animals (beef cattle and milk cows) (kg/d)
cutoffHeight	50	Height above which to use Briggs urban dispersion coefficients (m)
decayPlants	14	Weathering decay half-life for loss of contamination from vegetation due to weathering processes (days)
fracEdibleLeafAnimal	1	Fraction of radionuclides reaching the edible portion of animal-consumed vegetation (unitless)
fracEdibleLeafHuman	1	Fraction of radionuclides reaching the edible portion of human-consumed leafy vegetables (unitless)

fracEdibleRoot	0.1	Fraction of radionuclides reaching the edible portion of human-consumed root vegetables (unitless)
fracHayInd	0.5	Fraction of livestock feed from stored hay for individual consumption (unitless)
fracHayPop	0.5	Fraction of livestock feed from stored hay for consumption by the general population (unitless)
fracMeatPrep	1	Fraction of radioactivity in meat remaining after food preparation (unitless)
fracMilkPrep	1	Fraction of radioactivity in milk remaining after food preparation (unitless)
fracPastureInd	0.5	Fraction of livestock feed from pasture grass for individual consumption (unitless)
fracPasturePop	0.5	Fraction of livestock feed from pasture grass for consumption by the general population (unitless)
fracRetain	0.2	Fraction of air-deposited radionuclides retained on vegetation (unitless)
fracVegPrep	0.5	Fraction of radioactivity in vegetables remaining after food preparation (unitless)
gridSize	5	Size of grid blocks to use when calculating air concentrations (m)
isPopExposure	False	Option to perform population ingestion calculations; true (1) or false (0)
isPopIngest	TRUE	Option to perform population ingestion calculations; true (1) or false (0)
jfdNotes	All wind blowing from S to N	Stores user notes as needed
mapProj	Local Coordinates	Contains the current map projection being used for the map display; consists of a list of the UTM zone, the datum (WGS84 or NAD83), and the EPSG code for the projection (EPSG stands for what used to be the European Petroleum Survey Group)
mapState		String with serialized map state
maxDistCalcArea	1000	Maximum distance between an area source and receptor where the area source model will be used; the source will be treated as a point source beyond the specified distance (m)
meatProd	0	Farmland meat productivity (kg/yr)
metFreq	0	Frequency of time wind is blowing in a specific direction, under a specific stability category, at a given wind speed (unitless)
milkProd	0	Farmland milk productivity (kg/yr)
nPeople	0	Number of people in sector segment (persons)
partFrac	0	Fraction of particle size distribution for a given average particle size (unitless)
pmMix	1000	Annual afternoon mixing height (m)
rain	1.1	Rainfall rate (m/yr)
relRate	0	Nuclide release rate (Ci/yr)
resuspDepVel	1e-5	Deposition velocity for particulates associated with the intial and final resuspension factors specified (m/s)
resuspFacFinal	1.00E-09	Final resuspension factor for determining resuspended air concentrations (1/m)
resuspFacInitial	1.00E-05	Initial resuspension factor for determining resuspended air concentrations (1/m)

resuspHalfLife	0.137	Resuspension factor decay half-life (yr)
soilArealDen	240	Areal surface density / effective surface soil density (kg/m^2)
soilConc	0	Nuclide soil concentration for area sources (pCi/g)
soilHalfLife	50	Environmental soil loss half-life (yr)
vegProd	0	Farmland vegetable productivity (kg/yr)
vGrow	60	Exposure time to radionuclides during the human-consumed vegetable growing season(d)
vGrowPasture	30	Exposure time to radionuclides during the animal-consumed vegetation growing season (d)
yieldMeat	3070	Farmland production rate of meat for population ingestion calculations (kg/km^2-yr)
yieldMilk	6710	Farmland production rate of milk for population ingestion calculations (kg/km^2-yr)
yieldVeg	55800	Farmland production rate of vegetation for population ingestion calculations (kg/km^2-yr)
yVeg	2	Yield density of human-consumed vegetation on farmland (kg/m^2)
yVegPasture	0.75	Yield density of animal-consumed vegetation on farmland (kg/m^2)
optOutTable	STD	Option that controls contents of the analysis output. STD - standard output only; STD_CUSTOM - standard and user specified custom output
optOutWho	1	Option that specifies what receptor type custom output to generate. 1 - individual receptors; 2 - population receptors; 3 - both individual and population receptors.

Receptors

(Return to Table of Contents)

Name	x (m)	y (m)	z (m)	Age Group	Indoor Occupancy Fraction	Outdoor Occupancy Fraction	Indoor External Shielding Factor	Indoor Inhalation Shielding Factor	Consider Vegetation Pathway?	Vegetation Ingestion Rate (kg/yr)	Consider Meat Pathway?	Meat Ingestion Rate (kg/yr)	Consider Milk Pathway?	Milk Ingestion Rate (kg/yr)	No.	Rn-222 Indoor Eq. Fraction	User Input Rn-222 Outdoor Eq. Frac.?	Rn-222 Outdoor Eq. Fraction
N Receptor	0.00E+00	1.00E+03	4.00E+00	Adult	5.83E-01	4.16E-01	7.00E-01	1.00E+00	True	1.05E+02	True	7.83E+01	True	1.30E+02	1	5.00E-01	True	7.00E-01

Sources

(Return to Table of Contents)

Name	Source Type	Release Type	Particle Distribution Set	x (m)	y (m)	z (m)	Dispersion Coefficients	No.
Point Source 1	Point	Point	3	0.00E+00	0.00E+00	1.50E+01	Pasquill-Gifford	1

Source Release Terms Before Time Step Adjustment [Ci/y]

Source	Rn-222	U-238	Th-230	Ra-226	Pb-210	Rn-220	Th-232	Ra-228	Th-228
Point Source 1	4.20E+01	2.60E-02	2.60E-02	2.60E-02	2.60E-02	1.50E+00	8.00E-04	8.00E-04	8.00E-04

Source Type Specific Parameters

Point Sources

Name	Source Type	Inside Stack Diameter (m)	Effluent Exit Velocity (m/s)	Rn-220 Release Rate	Rn-222 Release Rate	Momentum based rise?	Heat Release	Yellowcake Production Rate (kg/d)	Fraction Released to Stack
Point Source 1	Point	1.5	11	1.5	42	True	0	N/A	N/A

(table continued)

Name	Th Fraction	Ra Fraction	Others Fraction	Water Rate	Column Volume	Column Empty / Exchange Rate	Resin Porosity	Well Field Source
Point Source 1	N/A	N/A	N/A	N/A	N/A	N/A	N/A	N/A

Release Adjustments Over Time

Source	Particle Adjustment				Radon Adjustment			
Time step	Time 1	Time 2	Time 3	Time 4	Time 1	Time 2	Time 3	Time 4
Duration (years)	1	2	2	1	1	2	2	1
Point Source 1	0.8	1	1	0.9	0.8	1	1	0.9

Vegetable Ingestion Parameters

(Return to Table of Contents)

Vegetation Type	Infant Vegetable Ingestion Fraction	Child Vegetable Ingestion Fraction	Teenager Vegetable Ingestion Fraction	Adult Vegetable Ingestion Fraction	Population Vegetable Fraction
Above Ground	0.00E+00	3.60E-01	3.80E-01	3.80E-01	7.80E-01
Potatoes	0.00E+00	5.70E-01	5.50E-01	5.70E-01	2.00E-01
Below Ground	0.00E+00	7.00E-02	7.00E-02	5.00E-02	2.00E-02

Met JFD

(Return to Table of Contents)

Direction	Stability Class	0.67 m/s	2.46 m/s	4.47 m/s	6.93 m/s	9.61 m/s	12.5 m/s
N	A	0.00000	0.00000	0.00000	0.00000	0.00000	0.00000
NNE	A	0.00000	0.00000	0.00000	0.00000	0.00000	0.00000
NE	A	0.00000	0.00000	0.00000	0.00000	0.00000	0.00000
ENE	A	0.00000	0.00000	0.00000	0.00000	0.00000	0.00000
E	A	0.00000	0.00000	0.00000	0.00000	0.00000	0.00000
ESE	A	0.00000	0.00000	0.00000	0.00000	0.00000	0.00000
SE	A	0.00000	0.00000	0.00000	0.00000	0.00000	0.00000
SSE	A	0.00000	0.00000	0.00000	0.00000	0.00000	0.00000
S	A	0.06250	0.06250	0.00000	0.00000	0.00000	0.00000
SSW	A	0.00000	0.00000	0.00000	0.00000	0.00000	0.00000
SW	A	0.00000	0.00000	0.00000	0.00000	0.00000	0.00000
WSW	A	0.00000	0.00000	0.00000	0.00000	0.00000	0.00000
W	A	0.00000	0.00000	0.00000	0.00000	0.00000	0.00000
WNW	A	0.00000	0.00000	0.00000	0.00000	0.00000	0.00000
NW	A	0.00000	0.00000	0.00000	0.00000	0.00000	0.00000
NNW	A	0.00000	0.00000	0.00000	0.00000	0.00000	0.00000
N	B	0.00000	0.00000	0.00000	0.00000	0.00000	0.00000
NNE	B	0.00000	0.00000	0.00000	0.00000	0.00000	0.00000
NE	B	0.00000	0.00000	0.00000	0.00000	0.00000	0.00000
ENE	B	0.00000	0.00000	0.00000	0.00000	0.00000	0.00000
E	B	0.00000	0.00000	0.00000	0.00000	0.00000	0.00000
ESE	B	0.00000	0.00000	0.00000	0.00000	0.00000	0.00000
SE	B	0.00000	0.00000	0.00000	0.00000	0.00000	0.00000
SSE	B	0.00000	0.00000	0.00000	0.00000	0.00000	0.00000
S	B	0.00000	0.06250	0.06250	0.06250	0.00000	0.00000
SSW	B	0.00000	0.00000	0.00000	0.00000	0.00000	0.00000
SW	B	0.00000	0.00000	0.00000	0.00000	0.00000	0.00000
WSW	B	0.00000	0.00000	0.00000	0.00000	0.00000	0.00000
W	B	0.00000	0.00000	0.00000	0.00000	0.00000	0.00000
WNW	B	0.00000	0.00000	0.00000	0.00000	0.00000	0.00000
NW	B	0.00000	0.00000	0.00000	0.00000	0.00000	0.00000
NNW	B	0.00000	0.00000	0.00000	0.00000	0.00000	0.00000
N	C	0.00000	0.00000	0.00000	0.00000	0.00000	0.00000
NNE	C	0.00000	0.00000	0.00000	0.00000	0.00000	0.00000
NE	C	0.00000	0.00000	0.00000	0.00000	0.00000	0.00000
ENE	C	0.00000	0.00000	0.00000	0.00000	0.00000	0.00000
E	C	0.00000	0.00000	0.00000	0.00000	0.00000	0.00000
ESE	C	0.00000	0.00000	0.00000	0.00000	0.00000	0.00000
SE	C	0.00000	0.00000	0.00000	0.00000	0.00000	0.00000

SSE	C	0.00000	0.00000	0.00000	0.00000	0.00000	0.00000
S	C	0.00000	0.00000	0.06250	0.00000	0.06250	0.06250
SSW	C	0.00000	0.00000	0.00000	0.00000	0.00000	0.00000
SW	C	0.00000	0.00000	0.00000	0.00000	0.00000	0.00000
WSW	C	0.00000	0.00000	0.00000	0.00000	0.00000	0.00000
W	C	0.00000	0.00000	0.00000	0.00000	0.00000	0.00000
WNW	C	0.00000	0.00000	0.00000	0.00000	0.00000	0.00000
NW	C	0.00000	0.00000	0.00000	0.00000	0.00000	0.00000
NNW	C	0.00000	0.00000	0.00000	0.00000	0.00000	0.00000
N	D	0.00000	0.00000	0.00000	0.00000	0.00000	0.00000
NNE	D	0.00000	0.00000	0.00000	0.00000	0.00000	0.00000
NE	D	0.00000	0.00000	0.00000	0.00000	0.00000	0.00000
ENE	D	0.00000	0.00000	0.00000	0.00000	0.00000	0.00000
E	D	0.00000	0.00000	0.00000	0.00000	0.00000	0.00000
ESE	D	0.00000	0.00000	0.00000	0.00000	0.00000	0.00000
SE	D	0.00000	0.00000	0.00000	0.00000	0.00000	0.00000
SSE	D	0.00000	0.00000	0.00000	0.00000	0.00000	0.00000
S	D	0.00000	0.00000	0.00000	0.06250	0.06250	0.06250
SSW	D	0.00000	0.00000	0.00000	0.00000	0.00000	0.00000
SW	D	0.00000	0.00000	0.00000	0.00000	0.00000	0.00000
WSW	D	0.00000	0.00000	0.00000	0.00000	0.00000	0.00000
W	D	0.00000	0.00000	0.00000	0.00000	0.00000	0.00000
WNW	D	0.00000	0.00000	0.00000	0.00000	0.00000	0.00000
NW	D	0.00000	0.00000	0.00000	0.00000	0.00000	0.00000
NNW	D	0.00000	0.00000	0.00000	0.00000	0.00000	0.00000
N	E	0.00000	0.00000	0.00000	0.00000	0.00000	0.00000
NNE	E	0.00000	0.00000	0.00000	0.00000	0.00000	0.00000
NE	E	0.00000	0.00000	0.00000	0.00000	0.00000	0.00000
ENE	E	0.00000	0.00000	0.00000	0.00000	0.00000	0.00000
E	E	0.00000	0.00000	0.00000	0.00000	0.00000	0.00000
ESE	E	0.00000	0.00000	0.00000	0.00000	0.00000	0.00000
SE	E	0.00000	0.00000	0.00000	0.00000	0.00000	0.00000
SSE	E	0.00000	0.00000	0.00000	0.00000	0.00000	0.00000
S	E	0.00000	0.06250	0.06250	0.06250	0.00000	0.00000
SSW	E	0.00000	0.00000	0.00000	0.00000	0.00000	0.00000
SW	E	0.00000	0.00000	0.00000	0.00000	0.00000	0.00000
WSW	E	0.00000	0.00000	0.00000	0.00000	0.00000	0.00000
W	E	0.00000	0.00000	0.00000	0.00000	0.00000	0.00000
WNW	E	0.00000	0.00000	0.00000	0.00000	0.00000	0.00000
NW	E	0.00000	0.00000	0.00000	0.00000	0.00000	0.00000
NNW	E	0.00000	0.00000	0.00000	0.00000	0.00000	0.00000
N	F	0.00000	0.00000	0.00000	0.00000	0.00000	0.00000

NNE	F	0.00000	0.00000	0.00000	0.00000	0.00000	0.00000
NE	F	0.00000	0.00000	0.00000	0.00000	0.00000	0.00000
ENE	F	0.00000	0.00000	0.00000	0.00000	0.00000	0.00000
E	F	0.00000	0.00000	0.00000	0.00000	0.00000	0.00000
ESE	F	0.00000	0.00000	0.00000	0.00000	0.00000	0.00000
SE	F	0.00000	0.00000	0.00000	0.00000	0.00000	0.00000
SSE	F	0.00000	0.00000	0.00000	0.00000	0.00000	0.00000
S	F	0.06250	0.06250	0.00000	0.00000	0.00000	0.00000
SSW	F	0.00000	0.00000	0.00000	0.00000	0.00000	0.00000
SW	F	0.00000	0.00000	0.00000	0.00000	0.00000	0.00000
WSW	F	0.00000	0.00000	0.00000	0.00000	0.00000	0.00000
W	F	0.00000	0.00000	0.00000	0.00000	0.00000	0.00000
WNW	F	0.00000	0.00000	0.00000	0.00000	0.00000	0.00000
NW	F	0.00000	0.00000	0.00000	0.00000	0.00000	0.00000
NNW	F	0.00000	0.00000	0.00000	0.00000	0.00000	0.00000

Food Transfer Factors

(Return to Table of Contents)

FOOD_TYPE	U	Th	Ra	Pb	Comments
Soil to Above Ground Vegetables	2.50E-03	4.20E-03	1.40E-02	4.00E-03	(pCi/kg plant - wet weight)/(pCi/kg soil - dry weight)
Soil to Potatoes	2.50E-03	4.20E-03	3.00E-03	4.00E-03	(pCi/kg plant - wet weight)/(pCi/kg soil - dry weight)
Soil to Below Ground Vegetables	2.50E-03	4.20E-03	1.40E-02	4.00E-03	(pCi/kg plant - wet weight)/(pCi/kg soil - dry weight)
Soil to Pasture Grass	2.50E-03	4.20E-03	1.80E-02	2.80E-02	(pCi/kg plant - wet weight)/(pCi/kg soil - dry weight)
Soil to Stored Animal Feed	2.50E-03	4.20E-03	8.20E-02	3.60E-02	(pCi/kg plant - wet weight)/(pCi/kg soil - dry weight)
Animal Feed to Meat	3.40E-04	2.00E-04	5.10E-04	7.10E-04	(pCi/kg per pCi/day)

APPENDIX F
CASE 3c USER FILE INPUT SUMMARY

MILDOS STANDARD RESULTS REPORT

Case Title: Case 3c
Version: MILDOS 4.1
File: C:\mildos4\UserFiles\Case3c_verify_4_1.mla
Date: 04/05/2019 14:50:04

Table of Contents

- **Input Listing**
  - Parameters
  - Receptors
  - Sources
  - Vegetable Ingestion Parameters
  - Population Ingestion Parameters
  - 80km Population
  - 80km Vegetation
  - 80km Meat
  - 80km Milk
  - Meteorological Joint Freq Data
  - Food Transfer Factors

Parameters

(Return to Table of Contents)

Name	Value	Description
ambientT	283	Ambient temperature (K)
amMix	400	Annual average morning mixing height (m)
anemHeight	10	Anemometer height (m)
caseFile	place holder	not used
caseInfo	Sample file to check downwind dispersion Same as Case 3a except buoyancy-induced plume rise	Additional user-specified information for the case under study
caseTitle	Case 3c	User-defined title for case under study
cowIngestRate	50	Ingestion rate (feed wet weight) of animals (beef cattle and milk cows) (kg/d)
cutoffHeight	50	Height above which to use Briggs urban dispersion coefficients (m)
decayPlants	14	Weathering decay half-life for loss of contamination from vegetation due to weathering processes (days)
fracEdibleLeafAnimal	1	Fraction of radionuclides reaching the edible portion of animal-consumed vegetation (unitless)
fracEdibleLeafHuman	1	Fraction of radionuclides reaching the edible portion of human-consumed leafy vegetables (unitless)

fracEdibleRoot	0.1	Fraction of radionuclides reaching the edible portion of human-consumed root vegetables (unitless)
fracHayInd	0.5	Fraction of livestock feed from stored hay for individual consumption (unitless)
fracHayPop	0.5	Fraction of livestock feed from stored hay for consumption by the general population (unitless)
fracMeatPrep	1	Fraction of radioactivity in meat remaining after food preparation (unitless)
fracMilkPrep	1	Fraction of radioactivity in milk remaining after food preparation (unitless)
fracPastureInd	0.5	Fraction of livestock feed from pasture grass for individual consumption (unitless)
fracPasturePop	0.5	Fraction of livestock feed from pasture grass for consumption by the general population (unitless)
fracRetain	0.2	Fraction of air-deposited radionuclides retained on vegetation (unitless)
fracVegPrep	0.5	Fraction of radioactivity in vegetables remaining after food preparation (unitless)
gridSize	5	Size of grid blocks to use when calculating air concentrations (m)
isPopExposure	True	Option to perform population ingestion calculations; true (1) or false (0)
isPopIngest	TRUE	Option to perform population ingestion calculations; true (1) or false (0)
jfdNotes	Each direction targets only one receptor with one stability class - wind speed combination	Stores user notes as needed
mapProj	Local Coordinates	Contains the current map projection being used for the map display; consists of a list of the UTM zone, the datum (WGS84 or NAD83), and the EPSG code for the projection (EPSG stands for what used to be the European Petroleum Survey Group)
mapState		String with serialized map state
maxDistCalcArea	1000	Maximum distance between an area source and receptor where the area source model will be used; the source will be treated as a point source beyond the specified distance (m)
meatProd	0	Farmland meat productivity (kg/yr)
metFreq	0	Frequency of time wind is blowing in a specific direction, under a specific stability category, at a given wind speed (unitless)
milkProd	0	Farmland milk productivity (kg/yr)
nPeople	0	Number of people in sector segment (persons)
partFrac	0	Fraction of particle size distribution for a given average particle size (unitless)
pmMix	1000	Annual afternoon mixing height (m)
rain	1.1	Rainfall rate (m/yr)
relRate	0	Nuclide release rate (Ci/yr)
resuspDepVel	1e-5	Deposition velocity for particulates associated with the intial and final resuspension factors specified (m/s)

resuspFacFinal	1.00E-09	Final resuspension factor for determining resuspended air concentrations (1/m)
resuspFacInitial	1.00E-05	Initial resuspension factor for determining resuspended air concentrations (1/m)
resuspHalfLife	0.137	Resuspension factor decay half-life (yr)
soilArealDen	240	Areal surface density / effective surface soil density (kg/m^2)
soilConc	0	Nuclide soil concentration for area sources (pCi/g)
soilHalfLife	50	Environmental soil loss half-life (yr)
vegProd	0	Farmland vegetable productivity (kg/yr)
vGrow	60	Exposure time to radionuclides during the human-consumed vegetable growing season(d)
vGrowPasture	30	Exposure time to radionuclides during the animal-consumed vegetation growing season (d)
yieldMeat	3070	Farmland production rate of meat for population ingestion calculations (kg/km^2-yr)
yieldMilk	6710	Farmland production rate of milk for population ingestion calculations (kg/km^2-yr)
yieldVeg	55800	Farmland production rate of vegetation for population ingestion calculations (kg/km^2-yr)
yVeg	2	Yield density of human-consumed vegetation on farmland (kg/m^2)
yVegPasture	0.75	Yield density of animal-consumed vegetation on farmland (kg/m^2)
optOutTable	STD	Option that controls contents of the analysis output. STD - standard output only; STD_CUSTOM - standard and user specified custom output
optOutWho	1	Option that specifies what receptor type custom output to generate. 1 - individual receptors; 2 - population receptors; 3 - both individual and population receptors.

Receptors

(Return to Table of Contents)

Name	x (m)	y (m)	z (m)	Age Group	Indoor Occupancy Fraction	Outdoor Occupancy Fraction	Indoor External Shielding Factor	Indoor Inhalation Shielding Factor	Consider Vegetation Pathway?	Vegetation Ingestion Rate (kg/yr)	Consider Meat Pathway?	Meat Ingestion Rate (kg/yr)	Consider Milk Pathway?	Milk Ingestion Rate (kg/yr)	No.	Rn-222 Indoor Eq. Fraction	User Input Rn-222 Outdoor Eq. Frac.?	Rn-222 Outdoor Eq. Fraction
N Receptor	0.00E+00	1.00E+03	4.00E+00	Adult	5.83E-01	4.16E-01	7.00E-01	1.00E+00	True	1.05E+02	True	7.83E+01	True	1.30E+02	1	5.00E-01	True	7.00E-01
NNE Receptor	3.83E+02	9.24E+02	4.00E+00	Adult	5.83E-01	4.16E-01	7.00E-01	1.00E+00	True	1.05E+02	True	7.83E+01	True	1.30E+02	2	5.00E-01	True	7.00E-01
NE Receptor	7.07E+02	7.07E+02	4.00E+00	Adult	5.83E-01	4.16E-01	7.00E-01	1.00E+00	True	1.05E+02	True	7.83E+01	True	1.30E+02	3	5.00E-01	True	7.00E-01
ENE Receptor	9.24E+02	3.83E+02	4.00E+00	Adult	5.83E-01	4.16E-01	7.00E-01	1.00E+00	True	1.05E+02	True	7.83E+01	True	1.30E+02	4	5.00E-01	True	7.00E-01
E Receptor	1.00E+03	0.00E+00	4.00E+00	Adult	5.83E-01	4.16E-01	7.00E-01	1.00E+00	True	1.05E+02	True	7.83E+01	True	1.30E+02	5	5.00E-01	True	7.00E-01
ESE Receptor	9.24E+02	-3.83E+02	4.00E+00	Adult	5.83E-01	4.16E-01	7.00E-01	1.00E+00	True	1.05E+02	True	7.83E+01	True	1.30E+02	6	5.00E-01	True	7.00E-01
SE Receptor	7.07E+02	-7.07E+02	4.00E+00	Adult	5.83E-01	4.16E-01	7.00E-01	1.00E+00	True	1.05E+02	True	7.83E+01	True	1.30E+02	7	5.00E-01	True	7.00E-01
SSE Receptor	3.83E+02	-9.24E+02	4.00E+00	Adult	5.83E-01	4.16E-01	7.00E-01	1.00E+00	True	1.05E+02	True	7.83E+01	True	1.30E+02	8	5.00E-01	True	7.00E-01
S Receptor	0.00E+00	-1.00E+03	4.00E+00	Adult	5.83E-01	4.16E-01	8.25E-01	1.00E+00	True	1.05E+02	True	7.83E+01	True	1.30E+02	9	5.00E-01	True	7.00E-01
SSW Receptor	-3.83E+02	-9.24E+02	4.00E+00	Adult	5.83E-01	4.16E-01	8.25E-01	1.00E+00	True	1.05E+02	True	7.83E+01	True	1.30E+02	10	5.00E-01	True	7.00E-01
SW Receptor	-7.07E+02	-7.07E+02	4.00E+00	Adult	5.83E-01	4.16E-01	8.25E-01	1.00E+00	True	1.05E+02	True	7.83E+01	True	1.30E+02	11	5.00E-01	True	7.00E-01
WSW Receptor	-9.24E+02	-3.83E+02	4.00E+00	Adult	5.83E-01	4.16E-01	8.25E-01	1.00E+00	True	1.05E+02	True	7.83E+01	True	1.30E+02	12	5.00E-01	True	7.00E-01
W Receptor	-1.00E+03	0.00E+00	4.00E+00	Adult	5.83E-01	4.16E-01	8.25E-01	1.00E+00	True	1.05E+02	True	7.83E+01	True	1.30E+02	13	5.00E-01	True	7.00E-01
WNW Receptor	-9.24E+02	3.83E+02	4.00E+00	Adult	5.83E-01	4.16E-01	8.25E-01	1.00E+00	True	1.05E+02	True	7.83E+01	True	1.30E+02	14	5.00E-01	True	7.00E-01
NW Receptor to NW	-7.07E+02	7.07E+02	4.00E+00	Adult	5.83E-01	4.16E-01	8.25E-01	1.00E+00	True	1.05E+02	True	7.83E+01	True	1.30E+02	15	5.00E-01	True	7.00E-01
NNW Receptor	-3.83E+02	9.24E+02	4.00E+00	Adult	5.83E-01	4.16E-01	8.25E-01	1.00E+00	True	1.05E+02	True	7.83E+01	True	1.30E+02	16	5.00E-01	True	7.00E-01
Far SSW Receptor	-6.51E+02	-1.57E+03	4.00E+00	Adult	5.83E-01	4.16E-01	8.25E-01	1.00E+00	True	1.05E+02	True	7.83E+01	True	1.30E+02	17	5.00E-01	True	7.00E-01

Sources

(Return to Table of Contents)

Name	Source Type	Release Type	Particle Distribution Set	x (m)	y (m)	z (m)	Dispersion Coefficients	No.
Point Source 1	Point	Point	3	0.00E+00	0.00E+00	1.50E+01	Pasquill-Gifford	1

Source Release Terms Before Time Step Adjustment [Ci/y]

Source	Rn-222	U-238	Th-230	Ra-226	Pb-210	Rn-220	Th-232	Ra-228	Th-228
Point Source 1	4.20E+01	2.60E-02	2.60E-02	2.60E-02	2.60E-02	1.50E+00	8.00E-04	8.00E-04	8.00E-04

Source Type Specific Parameters

Point Sources

Name	Source Type	Inside Stack Diameter (m)	Effluent Exit Velocity (m/s)	Rn-220 Release Rate	Rn-222 Release Rate	Momentum based rise?	Heat Release	Yellowcake Production Rate (kg/d)	Fraction Released to Stack
Point Source 1	Point	1.5	11	1.5	42	True	35000	N/A	N/A

(table continued)

Name	Th Fraction	Ra Fraction	Others Fraction	Water Rate	Column Volume	Column Empty / Exchange Rate	Resin Porosity	Well Field Source
Point Source 1	N/A	N/A	N/A	N/A	N/A	N/A	N/A	N/A

Release Adjustments Over Time

Source	Particle Adjustment				Radon Adjustment			
Time step	Time 1	Time 2	Time 3	Time 4	Time 1	Time 2	Time 3	Time 4
Duration (years)	1	2	2	1	1	2	2	1
Point Source 1	0.8	1	1	0.9	0.8	1	1	0.9

Vegetable Ingestion Parameters

(Return to Table of Contents)

Vegetation Type	Infant Vegetable Ingestion Fraction	Child Vegetable Ingestion Fraction	Teenager Vegetable Ingestion Fraction	Adult Vegetable Ingestion Fraction	Population Vegetable Fraction
Above Ground	0.00E+00	3.60E-01	3.80E-01	3.80E-01	7.80E-01
Potatoes	0.00E+00	5.70E-01	5.50E-01	5.70E-01	2.00E-01
Below Ground	0.00E+00	7.00E-02	7.00E-02	5.00E-02	2.00E-02

Population Ingestion Parameters

(Return to Table of Contents)

Age Group	Fraction of Population	Vegetation Ingestion Rate (kg/yr)	Meat Ingestion Rate (kg/yr)	Milk Ingestion Rate (kg/yr)
Infant	1.79E-02	0.00E+00	0.00E+00	2.08E+02
Child	1.65E-01	2.38E+02	4.87E+01	2.35E+02
Teenager	1.96E-01	3.07E+02	7.80E+01	2.91E+02
Adult	6.22E-01	2.86E+02	1.28E+02	1.76E+02

80km Population

(Return to Table of Contents)

Direction	1-2 km	2-3 km	3-4 km	4-5 km	5-10 km	10-20 km	20-30 km	30-40 km	40-50 km	50-60 km	60-70 km	70-80 km
N	1	2	3	4	5	6	7	8	9	10	11	12
NNE	0	286	1603	1288	221	4073	6789	9505	12220	14591	15101	15552
NE	0	1288	1402	258	779	4073	6789	9505	12220	13210	12551	14482
ENE	0	1431	1202	1545	221	883	1472	3921	8870	14092	15611	16542
E	0	1431	2003	258	221	883	1472	2060	2649	3238	5900	8403
ESE	572	1431	2003	773	221	883	1472	2060	2649	3238	3826	4415
SE	572	143	21	26	221	883	1472	2060	2707	3677	4761	6404
SSE	916	215	21	26	221	883	1472	2060	3296	4995	5904	6812
S	286	143	200	26	221	883	1472	2060	2721	4995	5904	6812
SSW	12	15	21	26	221	883	2068	3870	3656	4995	5904	6812
SW	12	15	21	26	221	1360	3460	4844	6143	6304	6368	6812
WSW	12	15	21	26	370	2076	3460	4844	4789	4665	4838	5162
W	114	15	21	26	519	2076	3460	4844	2809	3214	3798	4382
WNW	114	15	21	26	519	2009	2904	3677	4427	4092	3798	4382
NW	229	15	21	44	519	1476	2348	3287	4226	5166	5841	6384
NNW	12	11	10	9	8	7	6	5	4	3	2	1

80km Vegetation (kg/yr)

(Return to Table of Contents)

Direction	1-2 km	2-3 km	3-4 km	4-5 km	5-10 km	10-20 km	20-30 km	30-40 km	40-50 km	50-60 km	60-70 km	70-80 km
N	0.00E+00	0.00E+00	0.00E+00	0.00E+00	0.00E+00	0.00E+00	3.90E+05	1.10E+06	1.70E+06	2.50E+06	4.20E+04	1.20E+05
NNE	0.00E+00	0.00E+00	0.00E+00	0.00E+00	0.00E+00	6.90E+02	4.50E+05	8.70E+05	1.40E+06	2.30E+06	3.50E+05	3.90E+05
NE	0.00E+00	0.00E+00	0.00E+00	0.00E+00	0.00E+00	3.30E+07	4.80E+05	7.90E+05	1.20E+06	1.20E+06	0.00E+00	8.30E+04
ENE	0.00E+00	0.00E+00	0.00E+00	0.00E+00	0.00E+00	4.40E+04	4.70E+05	7.90E+05	1.00E+06	8.80E+05	0.00E+00	1.00E+05
E	0.00E+00	0.00E+00	0.00E+00	0.00E+00	0.00E+00	1.10E+05	4.50E+04	2.70E+05	4.40E+05	3.90E+05	0.00E+00	9.10E+01
ESE	0.00E+00	0.00E+00	0.00E+00	0.00E+00	0.00E+00	1.20E+05	2.80E+05	1.10E+03	2.30E+02	1.30E+03	1.20E+02	7.00E+02
SE	0.00E+00	0.00E+00	0.00E+00	0.00E+00	0.00E+00	1.20E+05	5.30E+05	2.80E+06	6.60E+06	2.20E+06	2.20E+02	3.30E+02
SSE	0.00E+00	0.00E+00	0.00E+00	0.00E+00	0.00E+00	1.10E+05	5.80E+05	2.80E+06	1.20E+07	1.40E+07	0.00E+00	1.00E+05
S	0.00E+00	0.00E+00	0.00E+00	0.00E+00	0.00E+00	9.00E+04	5.80E+05	9.70E+05	5.10E+06	4.80E+06	3.20E+05	1.10E+05
SSW	0.00E+00	0.00E+00	0.00E+00	0.00E+00	0.00E+00	4.90E+04	5.80E+05	9.70E+05	1.00E+06	7.40E+05	5.90E+05	6.40E+05
SW	0.00E+00	0.00E+00	0.00E+00	0.00E+00	0.00E+00	3.90E+03	5.30E+05	8.90E+05	1.00E+06	7.50E+05	1.70E+05	2.90E+01
WSW	0.00E+00	0.00E+00	0.00E+00	0.00E+00	0.00E+00	0.00E+00	2.50E+05	4.90E+05	8.50E+05	1.10E+06	0.00E+00	1.00E+05
W	0.00E+00	0.00E+00	0.00E+00	0.00E+00	0.00E+00	0.00E+00	2.60E+05	3.40E+05	1.60E+05	7.00E+05	1.60E+02	1.20E+02
WNW	0.00E+00	0.00E+00	0.00E+00	0.00E+00	0.00E+00	0.00E+00	2.40E+05	4.00E+05	1.80E+05	5.60E+04	5.00E+02	6.30E+02
NW	0.00E+00	0.00E+00	0.00E+00	0.00E+00	0.00E+00	0.00E+00	4.30E+06	3.10E+05	3.70E+05	3.10E+05	7.10E+01	4.00E+02
NNW	0.00E+00	0.00E+00	0.00E+00	0.00E+00	0.00E+00	0.00E+00	2.60E+06	2.00E+06	1.10E+06	1.00E+06	1.20E+02	0.00E+00

80km Meat (kg/yr)

(Return to Table of Contents)

Direction	1-2 km	2-3 km	3-4 km	4-5 km	5-10 km	10-20 km	20-30 km	30-40 km	40-50 km	50-60 km	60-70 km	70-80 km
N	0.00E+00	0.00E+00	0.00E+00	0.00E+00	0.00E+00	0.00E+00	1.80E+06	3.10E+06	4.10E+06	6.30E+06	0.00E+00	1.00E+05
NNE	0.00E+00	0.00E+00	0.00E+00	0.00E+00	0.00E+00	3.10E+03	2.10E+06	3.40E+06	4.30E+06	6.70E+06	0.00E+00	1.00E+05
NE	0.00E+00	0.00E+00	0.00E+00	0.00E+00	0.00E+00	9.70E+07	2.20E+06	3.60E+06	4.80E+06	5.80E+06	6.50E+05	7.60E+05
ENE	0.00E+00	0.00E+00	0.00E+00	0.00E+00	0.00E+00	1.10E+05	2.10E+06	3.60E+06	5.30E+06	8.00E+06	7.90E+06	8.10E+06
E	0.00E+00	0.00E+00	0.00E+00	0.00E+00	0.00E+00	1.80E+05	2.30E+05	1.30E+06	3.40E+06	4.40E+06	3.80E+06	2.90E+06
ESE	0.00E+00	0.00E+00	0.00E+00	0.00E+00	0.00E+00	1.90E+05	5.00E+05	1.10E+05	5.40E+04	3.20E+05	2.00E+06	4.40E+06
SE	0.00E+00	0.00E+00	0.00E+00	0.00E+00	0.00E+00	2.00E+05	8.80E+05	8.20E+05	4.00E+05	1.40E+05	1.80E+06	3.50E+06
SSE	0.00E+00	0.00E+00	0.00E+00	0.00E+00	0.00E+00	1.90E+05	9.60E+05	1.30E+06	7.30E+05	1.20E+06	4.70E+04	1.20E+06
S	0.00E+00	0.00E+00	0.00E+00	0.00E+00	0.00E+00	1.50E+05	9.60E+05	1.60E+06	1.70E+06	2.40E+06	1.10E+06	7.90E+05
SSW	0.00E+00	0.00E+00	0.00E+00	0.00E+00	0.00E+00	8.10E+04	9.60E+05	1.60E+06	2.50E+06	3.80E+06	2.00E+06	3.30E+06
SW	0.00E+00	0.00E+00	0.00E+00	0.00E+00	0.00E+00	6.30E+03	1.20E+06	2.60E+06	4.20E+06	5.10E+06	1.90E+06	7.40E+06
WSW	0.00E+00	0.00E+00	0.00E+00	0.00E+00	0.00E+00	0.00E+00	3.40E+06	6.30E+06	7.80E+06	9.90E+06	3.90E+05	9.70E+06
W	0.00E+00	0.00E+00	0.00E+00	0.00E+00	0.00E+00	0.00E+00	3.60E+06	6.30E+06	7.90E+06	1.00E+07	1.70E+06	1.80E+06
WNW	0.00E+00	0.00E+00	0.00E+00	0.00E+00	0.00E+00	0.00E+00	3.30E+06	6.60E+06	8.40E+06	5.30E+06	4.60E+06	5.60E+06
NW	0.00E+00	0.00E+00	0.00E+00	0.00E+00	0.00E+00	0.00E+00	6.40E+07	6.80E+06	8.80E+06	9.20E+06	4.20E+06	5.70E+06
NNW	0.00E+00	0.00E+00	0.00E+00	0.00E+00	0.00E+00	0.00E+00	3.80E+07	3.00E+07	6.70E+06	7.80E+06	2.60E+06	1.60E+06

80km Milk (kg/yr)

(Return to Table of Contents)

Direction	1-2 km	2-3 km	3-4 km	4-5 km	5-10 km	10-20 km	20-30 km	30-40 km	40-50 km	50-60 km	60-70 km	70-80 km
N	0.00E+00	0.00E+00	0.00E+00	0.00E+00	0.00E+00	0.00E+00	0.00E+00	0.00E+00	0.00E+00	1.00E+05	0.00E+00	9.10E+01
NNE	0.00E+00	0.00E+00	0.00E+00	0.00E+00	0.00E+00	0.00E+00	0.00E+00	0.00E+00	0.00E+00	1.00E+05	1.20E+02	7.00E+02
NE	0.00E+00	0.00E+00	0.00E+00	0.00E+00	0.00E+00	3.40E+05	0.00E+00	0.00E+00	0.00E+00	1.10E+03	2.20E+02	3.30E+02
ENE	0.00E+00	0.00E+00	0.00E+00	0.00E+00	0.00E+00	3.70E+02	3.30E+01	0.00E+00	1.60E+03	8.80E+03	0.00E+00	1.00E+05
E	0.00E+00	0.00E+00	0.00E+00	0.00E+00	0.00E+00	1.30E+03	1.30E+02	0.00E+00	2.80E+03	4.10E+03	3.20E+05	1.10E+05
ESE	0.00E+00	0.00E+00	0.00E+00	0.00E+00	0.00E+00	1.40E+03	3.40E+03	0.00E+00	0.00E+00	0.00E+00	5.90E+05	6.40E+05
SE	0.00E+00	0.00E+00	0.00E+00	0.00E+00	0.00E+00	1.40E+03	6.30E+03	4.70E+03	0.00E+00	0.00E+00	1.70E+05	2.90E+01
SSE	0.00E+00	0.00E+00	0.00E+00	0.00E+00	0.00E+00	1.30E+03	6.90E+03	8.70E+03	8.60E+00	2.40E+03	0.00E+00	1.00E+05
S	0.00E+00	0.00E+00	0.00E+00	0.00E+00	0.00E+00	1.10E+03	6.90E+03	1.20E+04	1.10E+04	4.80E+04	1.60E+02	1.20E+02
SSW	0.00E+00	0.00E+00	0.00E+00	0.00E+00	0.00E+00	5.90E+02	6.90E+03	1.20E+04	3.10E+05	9.60E+05	5.00E+02	6.30E+02
SW	0.00E+00	0.00E+00	0.00E+00	0.00E+00	0.00E+00	4.60E+01	6.00E+03	3.10E+04	2.50E+05	7.70E+05	7.10E+01	4.00E+02
WSW	0.00E+00	0.00E+00	0.00E+00	0.00E+00	0.00E+00	0.00E+00	7.60E+00	3.20E+04	1.60E+05	2.10E+05	1.20E+02	0.00E+00
W	0.00E+00	0.00E+00	0.00E+00	0.00E+00	0.00E+00	0.00E+00	0.00E+00	0.00E+00	2.30E+04	1.30E+05	2.00E+06	3.30E+06
WNW	0.00E+00	0.00E+00	0.00E+00	0.00E+00	0.00E+00	0.00E+00	0.00E+00	0.00E+00	0.00E+00	1.00E+05	1.90E+06	7.40E+06
NW	0.00E+00	0.00E+00	0.00E+00	0.00E+00	0.00E+00	0.00E+00	0.00E+00	0.00E+00	0.00E+00	1.00E+05	3.90E+05	9.70E+06
NNW	0.00E+00	0.00E+00	0.00E+00	0.00E+00	0.00E+00	0.00E+00	0.00E+00	0.00E+00	0.00E+00	1.00E+05	1.70E+06	1.80E+06

Met JFD

(Return to Table of Contents)

Direction	Stability Class	0.67 m/s	2.46 m/s	4.47 m/s	6.93 m/s	9.61 m/s	12.5 m/s
N	A	0.06250	0.00000	0.00000	0.00000	0.00000	0.00000
NNE	A	0.00000	0.06250	0.00000	0.00000	0.00000	0.00000
NE	A	0.00000	0.00000	0.00000	0.00000	0.00000	0.00000
ENE	A	0.00000	0.00000	0.00000	0.00000	0.00000	0.00000
E	A	0.00000	0.00000	0.00000	0.00000	0.00000	0.00000
ESE	A	0.00000	0.00000	0.00000	0.00000	0.00000	0.00000
SE	A	0.00000	0.00000	0.00000	0.00000	0.00000	0.00000
SSE	A	0.00000	0.00000	0.00000	0.00000	0.00000	0.00000
S	A	0.00000	0.00000	0.00000	0.00000	0.00000	0.00000
SSW	A	0.00000	0.00000	0.00000	0.00000	0.00000	0.00000
SW	A	0.00000	0.00000	0.00000	0.00000	0.00000	0.00000
WSW	A	0.00000	0.00000	0.00000	0.00000	0.00000	0.00000
W	A	0.00000	0.00000	0.00000	0.00000	0.00000	0.00000
WNW	A	0.00000	0.00000	0.00000	0.00000	0.00000	0.00000
NW	A	0.00000	0.00000	0.00000	0.00000	0.00000	0.00000
NNW	A	0.00000	0.00000	0.00000	0.00000	0.00000	0.00000
N	B	0.00000	0.00000	0.00000	0.00000	0.00000	0.00000
NNE	B	0.00000	0.00000	0.00000	0.00000	0.00000	0.00000
NE	B	0.00000	0.06250	0.00000	0.00000	0.00000	0.00000
ENE	B	0.00000	0.00000	0.06250	0.00000	0.00000	0.00000
E	B	0.00000	0.00000	0.00000	0.06250	0.00000	0.00000

ESE	B	0.00000	0.00000	0.00000	0.00000	0.00000	0.00000
SE	B	0.00000	0.00000	0.00000	0.00000	0.00000	0.00000
SSE	B	0.00000	0.00000	0.00000	0.00000	0.00000	0.00000
S	B	0.00000	0.00000	0.00000	0.00000	0.00000	0.00000
SSW	B	0.00000	0.00000	0.00000	0.00000	0.00000	0.00000
SW	B	0.00000	0.00000	0.00000	0.00000	0.00000	0.00000
WSW	B	0.00000	0.00000	0.00000	0.00000	0.00000	0.00000
W	B	0.00000	0.00000	0.00000	0.00000	0.00000	0.00000
WNW	B	0.00000	0.00000	0.00000	0.00000	0.00000	0.00000
NW	B	0.00000	0.00000	0.00000	0.00000	0.00000	0.00000
NNW	B	0.00000	0.00000	0.00000	0.00000	0.00000	0.00000
N	C	0.00000	0.00000	0.00000	0.00000	0.00000	0.00000
NNE	C	0.00000	0.00000	0.00000	0.00000	0.00000	0.00000
NE	C	0.00000	0.00000	0.00000	0.00000	0.00000	0.00000
ENE	C	0.00000	0.00000	0.00000	0.00000	0.00000	0.00000
E	C	0.00000	0.00000	0.00000	0.00000	0.00000	0.00000
ESE	C	0.00000	0.00000	0.06250	0.00000	0.00000	0.00000
SE	C	0.00000	0.00000	0.00000	0.00000	0.06250	0.00000
SSE	C	0.00000	0.00000	0.00000	0.00000	0.00000	0.06250
S	C	0.00000	0.00000	0.00000	0.00000	0.00000	0.00000
SSW	C	0.00000	0.00000	0.00000	0.00000	0.00000	0.00000
SW	C	0.00000	0.00000	0.00000	0.00000	0.00000	0.00000
WSW	C	0.00000	0.00000	0.00000	0.00000	0.00000	0.00000
W	C	0.00000	0.00000	0.00000	0.00000	0.00000	0.00000
WNW	C	0.00000	0.00000	0.00000	0.00000	0.00000	0.00000
NW	C	0.00000	0.00000	0.00000	0.00000	0.00000	0.00000
NNW	C	0.00000	0.00000	0.00000	0.00000	0.00000	0.00000
N	D	0.00000	0.00000	0.00000	0.00000	0.00000	0.00000
NNE	D	0.00000	0.00000	0.00000	0.00000	0.00000	0.00000
NE	D	0.00000	0.00000	0.00000	0.00000	0.00000	0.00000
ENE	D	0.00000	0.00000	0.00000	0.00000	0.00000	0.00000
E	D	0.00000	0.00000	0.00000	0.00000	0.00000	0.00000
ESE	D	0.00000	0.00000	0.00000	0.00000	0.00000	0.00000
SE	D	0.00000	0.00000	0.00000	0.00000	0.00000	0.00000
SSE	D	0.00000	0.00000	0.00000	0.00000	0.00000	0.00000
S	D	0.00000	0.00000	0.00000	0.06250	0.00000	0.00000
SSW	D	0.00000	0.00000	0.00000	0.00000	0.06250	0.00000
SW	D	0.00000	0.00000	0.00000	0.00000	0.00000	0.06250
WSW	D	0.00000	0.00000	0.00000	0.00000	0.00000	0.00000
W	D	0.00000	0.00000	0.00000	0.00000	0.00000	0.00000
WNW	D	0.00000	0.00000	0.00000	0.00000	0.00000	0.00000
NW	D	0.00000	0.00000	0.00000	0.00000	0.00000	0.00000

NNW	D	0.00000	0.00000	0.00000	0.00000	0.00000	0.00000
N	E	0.00000	0.00000	0.00000	0.00000	0.00000	0.00000
NNE	E	0.00000	0.00000	0.00000	0.00000	0.00000	0.00000
NE	E	0.00000	0.00000	0.00000	0.00000	0.00000	0.00000
ENE	E	0.00000	0.00000	0.00000	0.00000	0.00000	0.00000
E	E	0.00000	0.00000	0.00000	0.00000	0.00000	0.00000
ESE	E	0.00000	0.00000	0.00000	0.00000	0.00000	0.00000
SE	E	0.00000	0.00000	0.00000	0.00000	0.00000	0.00000
SSE	E	0.00000	0.00000	0.00000	0.00000	0.00000	0.00000
S	E	0.00000	0.00000	0.00000	0.00000	0.00000	0.00000
SSW	E	0.00000	0.00000	0.00000	0.00000	0.00000	0.00000
SW	E	0.00000	0.00000	0.00000	0.00000	0.00000	0.00000
WSW	E	0.00000	0.06250	0.00000	0.00000	0.00000	0.00000
W	E	0.00000	0.00000	0.06250	0.00000	0.00000	0.00000
WNW	E	0.00000	0.00000	0.00000	0.06250	0.00000	0.00000
NW	E	0.00000	0.00000	0.00000	0.00000	0.00000	0.00000
NNW	E	0.00000	0.00000	0.00000	0.00000	0.00000	0.00000
N	F	0.00000	0.00000	0.00000	0.00000	0.00000	0.00000
NNE	F	0.00000	0.00000	0.00000	0.00000	0.00000	0.00000
NE	F	0.00000	0.00000	0.00000	0.00000	0.00000	0.00000
ENE	F	0.00000	0.00000	0.00000	0.00000	0.00000	0.00000
E	F	0.00000	0.00000	0.00000	0.00000	0.00000	0.00000
ESE	F	0.00000	0.00000	0.00000	0.00000	0.00000	0.00000
SE	F	0.00000	0.00000	0.00000	0.00000	0.00000	0.00000
SSE	F	0.00000	0.00000	0.00000	0.00000	0.00000	0.00000
S	F	0.00000	0.00000	0.00000	0.00000	0.00000	0.00000
SSW	F	0.00000	0.00000	0.00000	0.00000	0.00000	0.00000
SW	F	0.00000	0.00000	0.00000	0.00000	0.00000	0.00000
WSW	F	0.00000	0.00000	0.00000	0.00000	0.00000	0.00000
W	F	0.00000	0.00000	0.00000	0.00000	0.00000	0.00000
WNW	F	0.00000	0.00000	0.00000	0.00000	0.00000	0.00000
NW	F	0.06250	0.00000	0.00000	0.00000	0.00000	0.00000
NNW	F	0.00000	0.06250	0.00000	0.00000	0.00000	0.00000

Food Transfer Factors

(Return to Table of Contents)

FOOD_TYPE	U	Th	Ra	Pb	Comments
Soil to Above Ground Vegetables	2.50E-03	4.20E-03	1.40E-02	4.00E-03	(pCi/kg plant - wet weight)/(pCi/kg soil - dry weight)
Soil to Potatoes	2.50E-03	4.20E-03	3.00E-03	4.00E-03	(pCi/kg plant - wet weight)/(pCi/kg soil - dry weight)
Soil to Below Ground Vegetables	2.50E-03	4.20E-03	1.40E-02	4.00E-03	(pCi/kg plant - wet weight)/(pCi/kg soil - dry weight)
Soil to Pasture Grass	2.50E-03	4.20E-03	1.80E-02	2.80E-02	(pCi/kg plant - wet weight)/(pCi/kg soil - dry weight)
Soil to Stored Animal Feed	2.50E-03	4.20E-03	8.20E-02	3.60E-02	(pCi/kg plant - wet weight)/(pCi/kg soil - dry weight)
Animal Feed to Meat	3.40E-04	2.00E-04	5.10E-04	7.10E-04	(pCi/kg per pCi/day)
Animal Feed to Milk	6.10E-04	5.00E-06	5.90E-04	1.20E-04	(pCi/L per pCi/day)

NRC FORM 335
(12-2010)
NRCMD 3.7

U.S. NUCLEAR REGULATORY COMMISSION

BIBLIOGRAPHIC DATA SHEET

(See instructions on the reverse)

1. REPORT NUMBER
(Assigned by NRC, Add Vol., Supp., Rev., and Addendum Numbers, if any.)

NUREG/CR-7259

2. TITLE AND SUBTITLE

MILDOS Version 4.1 Computational Verification Report

3. DATE REPORT PUBLISHED

MONTH	YEAR
November	2019

4. FIN OR GRANT NUMBER

E-AC02-06CH11357

5. AUTHOR(S)

B.M. Biwer, D.J. LePoire, S. Kamboj, and Y.-S. Chang

6. TYPE OF REPORT

Technical

7. PERIOD COVERED (Inclusive Dates)

8. PERFORMING ORGANIZATION - NAME AND ADDRESS (If NRC, provide Division, Office or Region, U. S. Nuclear Regulatory Commission, and mailing address; if contractor, provide name and mailing address.)

Environmental Science Division
Argonne National Laboratory
9700 South Cass Avenue
Argonne, IL 60439

9. SPONSORING ORGANIZATION - NAME AND ADDRESS (If NRC, type "Same as above", if contractor, provide NRC Division, Office or Region, U. S. Nuclear Regulatory Commission, and mailing address.)

Division of Systems Analysis
Office of Nuclear Regulatory Research
U.S. Nuclear Regulatory Commission
Washington, D.C. 20555-0001

10. SUPPLEMENTARY NOTES

Casper Sun, NRC Project Manager

11. ABSTRACT (200 words or less)

Verification calculations were performed to provide assurance that the MILDOS computer code is performing its calculations as intended, that is, the models are properly implemented in the code. MILDOS is used to estimate the radiological impacts from airborne emissions from uranium milling facilities. It provides the capability to consider both conventional uranium ore operations and operations associated with in situ recovery facilities. The code is used by license applicants and U.S. Nuclear Regulatory Commission staff to perform routine radiological impact estimates for the licensing of various uranium recovery operations. Independent verification of the calculations was performed external to the computer code in spreadsheets using Microsoft Excel®. All major portions of the code were investigated. The verification was conducted on a step-by-step basis and used five sample test cases as templates. Calculations were performed to verify the reported radionuclide release rates, air dispersion results, environmental media concentrations, and human exposure doses.

12. KEY WORDS/DESCRIPTORS (List words or phrases that will assist researchers in locating the report.)

external dose
gaussian plume model
in situ recovery
internal dose
radioactivity
radon
uranium milling.

13. AVAILABILITY STATEMENT

unlimited

14. SECURITY CLASSIFICATION

(This Page)
unclassified

(This Report)
unclassified

15. NUMBER OF PAGES

16. PRICE

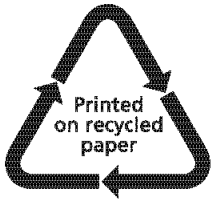

Federal Recycling Program

UNITED STATES
NUCLEAR REGULATORY COMMISSION
WASHINGTON, DC 20555-0001

OFFICIAL BUSINESS